


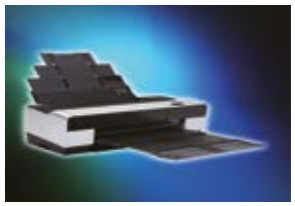





KOCO DC-MOTION

A VARIETY OF APPLICATIONS

Overview of the
BRUSHLESS DC MOTORS

	Motor No.	Dia x Length (max)	Max. Power	Page
1	**B1020N**	10.00 x 20.00 mm	11.50 W	4
2	**B1215N2B**	12.00 x 15.00 mm	4.60 W	5
3	**B1220N2B**	12.00 x 20.00 mm	3.30 W	6
4	**B1230N2B**	12.00 x 30.00 mm	7.80 W	7
5	**B1233NH2B**	12.00 x 32.80 mm	10.00 W	8
6	**B1250NH2B**	12.70 x 50.00 mm	9.00 W	9
7	**B1329N2B**	13.00 x 29.00 mm	4.20 W	10
8	**B1635N2B**	16.00 x 35.00 mm	100.00 W	11
9	**BS1635NB2B**	16.00 x 35.00 mm	4.00 W	12
10	**BS1635NBH2B**	16.00 x 35.00 mm	6.00 W	13
11	**B1659NH2B**	16.00 x 58.60 mm	556.00 W	14
12	**B2040N2B**	20.00 x 40.00 mm	31.00 W	15
13	**B2040NIE2B**	20.00 x 40.00 mm	0.18 W	16
14	**B2135NIE2B**	21.00 x 35.00 mm	2.00 W	17
15	**B2440NH2B**	24.00 x 40.00 mm	56.00 W	18
16	**BS2835NB2B**	28.00 x 35.00 mm	88.00 W	19
17	**B2950NH2B**	29.00 x 50.00 mm	105.00 W	20
18	**BS3240NBH2B**	31.00 x 40.00 mm	6.00 W	21
19	**B3265NH2B**	32.00 x 65.00 mm	215.00 W	22
20	**B4040NH2B**	40.00 x 39.10 mm	70.00 W	23
21	**B7584FBHIE2B**	75.00 x 84.00 mm	49.00 W	24
22	**BO1410NB2B**	14.20 x 9.60 mm	0.60 W	25
23	**BO1509NBH2B**	15.50 x 8.70 mm	3.20 W	26
24	**BO1511N2B**	14.20 x 12.00 mm	29.00 W	27
25	**BO1613N2B**	16.00 x 13.30 mm	26.00 W	28
26	**BO1709NB2B**	17.00 x 9.50 mm	5.20 W	29
27	**BO1815N2B**	18.00 x 14.50 mm	158.00 W	30
28	**BO2010NB2B**	20.00 x 23.30 mm	15.00 W	31
29	**BO2015NB2B**	21.20 x 15.20 mm	9.00 W	32
30	**BO2316N2B**	22.80 x 10.20 mm	70.00 W	33
31	**BO2414NB2B**	24.50 x 14.00 mm	1.60 W	34
32	**BO2814N2B**	27.60 x 14.30 mm	253.00 W	35
33	**BO2820N2B**	27.60 x 20.10 mm	210.00 W	36
34	**BO2824N2B**	27.70 x 24.00 mm	169.00 W	37
35	**BO2826N2B**	27.60 x 25.80 mm	387.00 W	38
36	**BO2828N2B**	27.70 x 29.40 mm	452.00 W	39
37	**BO2914NBH2B**	46.00 x 43.00 x 14.00 mm	10.00 W	40
38	**BF3211N2B**	32.00 x 11.20 mm	8.00 W	41
39	**BO3216NB2B**	31.50 x 15.90 mm	32.70 W	42
40	**BO3518N2B**	35.00 x 18.50 mm	103.00 W	43
41	**BO3518NB2B**	34.50 x 18.00 mm	3.30 W	44
42	**BO3823N2B**	37.60 x 23.00 mm	215.00 W	45
43	**BO3828NB2B**	37.10 x 27.60 mm	292.00 W	46
44	**BO4316NB2B**	43.20 x 16.40 mm	37.00 W	47
45	**BO4326NBH2B**	42.80 x 26.70 mm	150.00 W	48
46	**BO4830N2B**	48.00 x 30.00 mm	560.00 W	49
47	**BO6133N2B**	61.20 x 33.00 mm	1750.00 W	50
48	**BO6452N3B**	63.00 x 52.00 mm	1764.00 W	51
49	**BO8724N2B**	87.00 x 22.30 mm	1892.00 W	52

BRUSHLESS DC MOTOR

The brushless dc motor (BLDC) utilizes electronic commutation instead of mechanical commutation which overcomes the weaknesses of contact-type (brush) commutation, while providing excellent reliability and extremely long lifetime. Attributes of the motor's excellent performance include:

- **high reliability**
- **high rotational speed**
- **excellent size to power ratio**
- **high short-term overload capability**
- **low EMI**
- **good speed regulation**
- **can operate in certain poor environment conditions**

These motors are frequently used in application fields such as medical equipment, robotics, industrial equipment, UAV, electrical tools, and small household appliances.

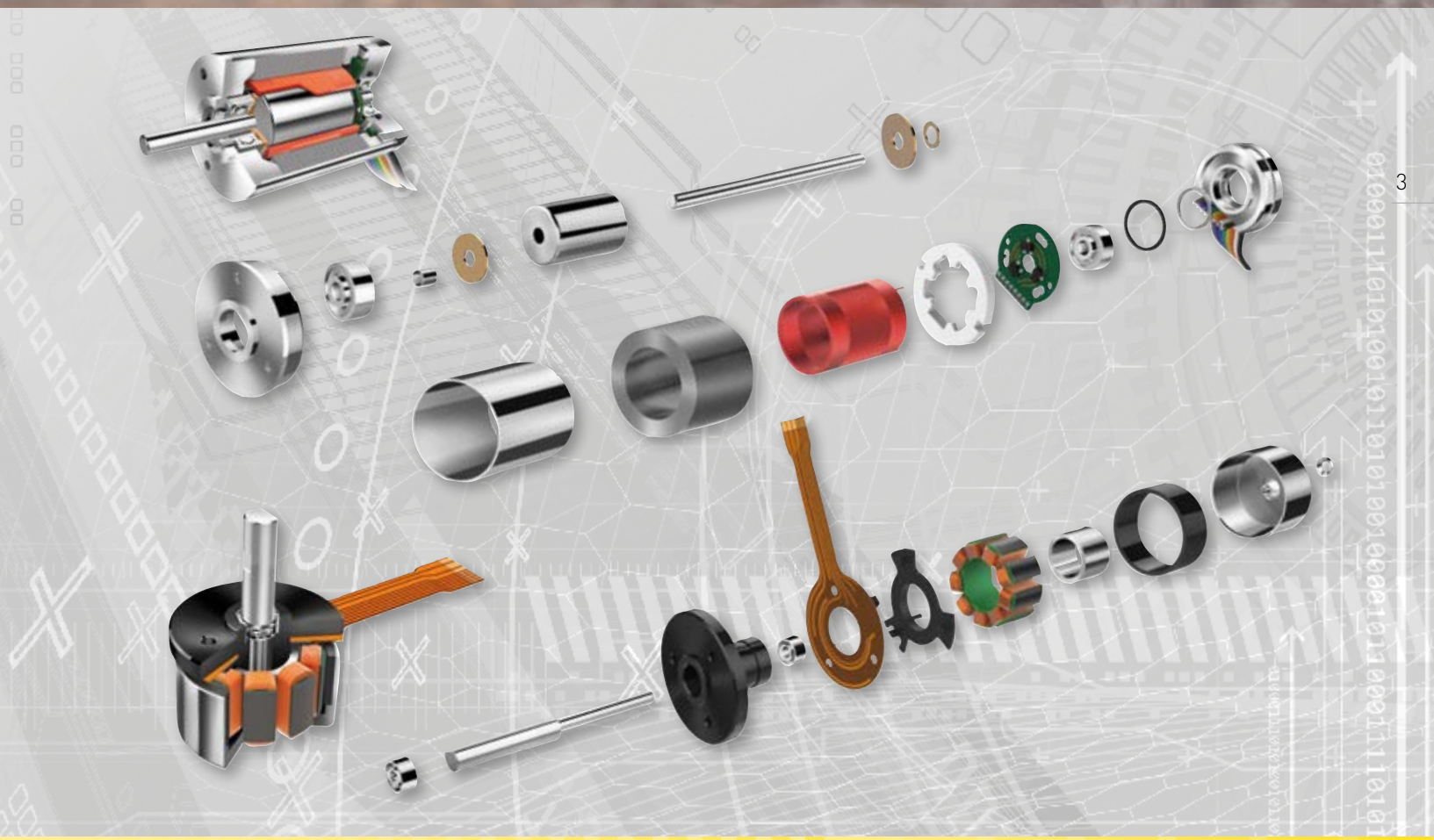

Brushless DC Motor · **B1020N**

Inner Rotor Without Sensor

	Characteristics		01-393-7.4
1	Voltage	V	7.4
2	Terminal resistance	Ω	1.08
3	No-load speed	rpm	39300
4	No-load current	A	0.32
5	Nominal torque	mNm	2.6
6	Nominal speed	rpm	30000
7	Nominal current	A	1.85
8	Max. output power	W	11.5
9	Max. efficiency	%	61
10	Back-EMF constant	mV/rpm	0.18
11	Torque constant	mNm/A	1.70
12	KV Value	rpm/V	5300
13	Speed/torque gradient	rpm/mNm	3500
14	Rotor inertia	gcm^2	0.06
15	Weight	g	6.8
16	Thermal resistance housing-ambient	K/W	44
17	Thermal resistance winding-housing	K/W	10
18	Thermal time constant motor	s	124
19	Thermal time constant winding	s	119
20	Operating temperature range	°C	-20 ~ +100
21	Thermal class of winding	°C	155
22	Axial play	mm	0.012
23	Radial play	mm	0.008
24	Axial load dynamic	N	1
25	Axial load static	N	25
26	Radial load at 3 mm from mounting face	N	6.3
27	No. of pole pairs		1
28	Bearings		2 ball bearings
29	Commutation		Sensorless
30	Protection class		IP 20

Approx. actual size

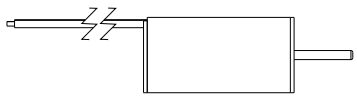

Applications

Precision drives in medical equipment, industrial automation fields

Options

Lead wires length	Bearing type
Shaft length	Hall sensor
Special coils	Encoder
Gearheads	Driver

Dimension (mm) · B1020N

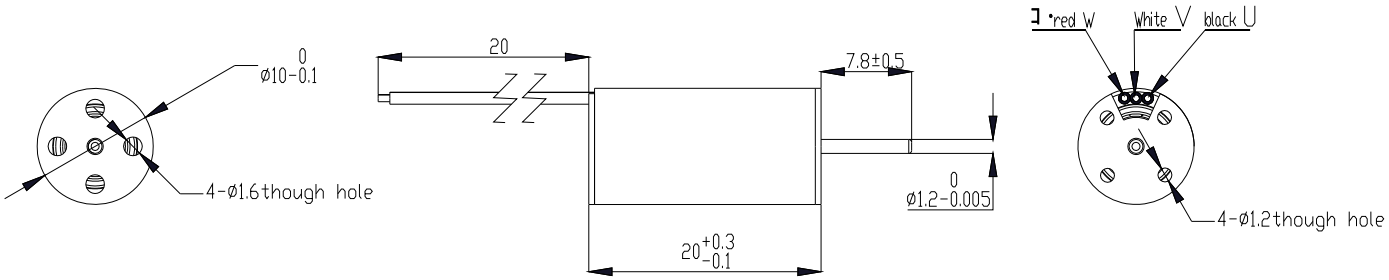

Brushless DC Motor · **B1215N2B**

Inner Rotor Without Sensor

	Characteristics		09-350-3.6	06-145-4.5	12-425-7.4
1	Voltage	V	3.6	4.5	7.4
2	Terminal resistance	Ω	0.67	5.2	2.6
3	No-load speed	rpm	35000	14500	42500
4	No-load current	A	0.3	0.1	0.2
5	Nominal torque	mNm	0.7	1.0	0.3
6	Nominal speed	rpm	28200	4400	38000
7	Nominal current	A	1.1	0.5	0.4
8	Max. output power	W	4.3	0.8	4.6
9	Max. efficiency	%	58	44	54
10	Back-EMF constant	mV/rpm	0.10	0.27	0.16
11	Torque constant	mNm/A	0.93	2.62	1.55
12	KV Value	rpm/V	9720	3220	5740
13	Speed/torque gradient	rpm/mNm	7440	7230	10400
14	Rotor inertia	gcm^2	0.14	0.14	0.14
15	Weight	g	7	7	7
16	Thermal resistance housing-ambient	K/W	37.8	37.8	37.8
17	Thermal resistance winding-housing	K/W	6.2	6.2	6.2
18	Thermal time constant motor	s	170	170	170
19	Thermal time constant winding	s	2	2	2
20	Operating temperature range	°C	-40 ~ +100	-40 ~ +100	-40 ~ +100
21	Thermal class of winding	°C	155	155	155
22	Axial play	mm	0.012	0.012	0.012
23	Radial play	mm	0.008	0.008	0.008
24	Axial load dynamic	N	1	1	1
25	Axial load static	N	25	25	25
26	Radial load at 3 mm from mounting face	N	6.3	6.3	6.3
27	No. of pole pairs		1	1	1
28	Bearings		2 ball bearings		
29	Commutation		Sensorless		
30	Protection class		IP 20		

Approx. actual size

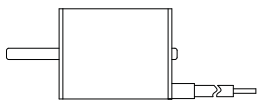

Applications

Precision drives in medical equipment, industrial automation fields

Options

Lead wires length	Bearing type
Shaft length	Hall sensor
Special coils	Encoder
Gearheads	Driver

Dimension (mm) · B1215N2B

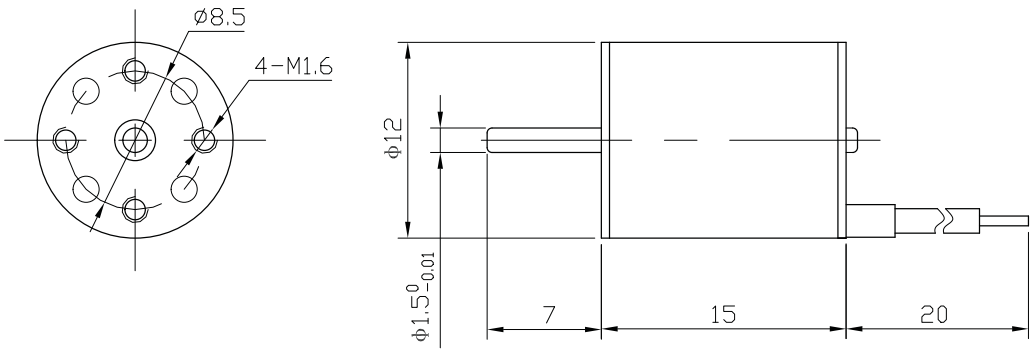

Brushless DC Motor · **B1220N2B**

Inner Rotor Without Sensor

	Characteristics		03-230-7.4	02-172-6.0	01-175-5.0
1	Voltage	V	7.4	6	5
2	Terminal resistance	Ω	3.8	3.4	2
3	No-load speed	rpm	23000	17200	17500
4	No-load current	A	0.1	0.15	0.18
5	Nominal torque	mNm	1.3	1.3	1.4
6	Nominal speed	rpm	15300	10800	11600
7	Nominal current	A	0.57	0.6	0.78
8	Max. output power	W	3.3	2.2	2.5
9	Max. efficiency	%	62	50	51
10	Back-EMF constant	mV/rpm	0.3	0.3	0.3
11	Torque constant	mNm/A	2.9	3.0	2.5
12	KV Value	rpm/V	3100	2900	3500
13	Speed/torque gradient	rpm/mNm	3800	3700	3030
14	Rotor inertia	gcm^2	0.17	0.17	0.17
15	Weight	g	9.5	9.5	9.5
16	Thermal resistance housing-ambient	K/W	32	32	32
17	Thermal resistance winding-housing	K/W	5.5	5.5	5.5
18	Thermal time constant motor	s	190	190	190
19	Thermal time constant winding	s	1.5	1.5	1.5
20	Operating temperature range	°C	-40 ~ +100	-40 ~ +100	-40 ~ +100
21	Thermal class of winding	°C	155	155	155
22	Axial play	mm	0.012	0.012	0.012
23	Radial play	mm	0.008	0.008	0.008
24	Axial load dynamic	N	1	1	1
25	Axial load static	N	25	25	25
26	Radial load at 3 mm from mounting face	N	6.3	6.3	6.3
27	No. of pole pairs		1	1	1
28	Bearings		2 ball bearings		
29	Commutation		Sensorless		
30	Protection class		IP 20		

Approx. actual size

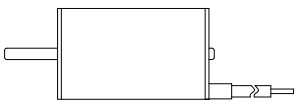

Applications

Precision drives in medical equipment, industrial automation fields

Options

Lead wires length	Bearing type
Shaft length	Hall sensor
Special coils	Encoder
Gearheads	Driver

Dimension (mm) · B1220N2B

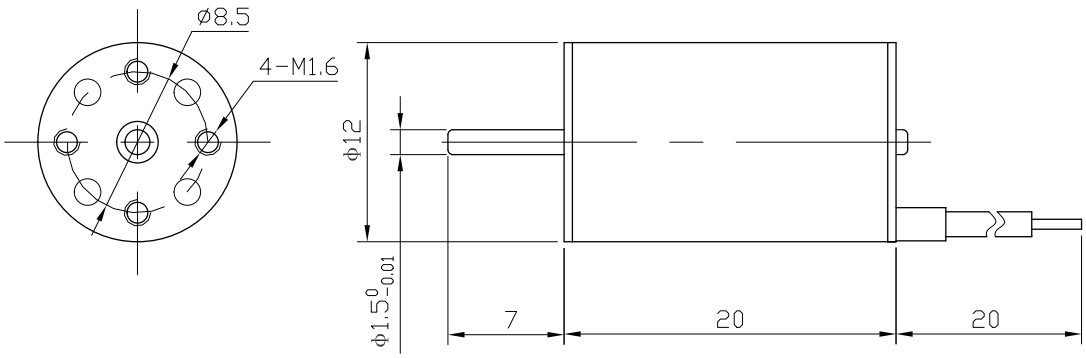

Brushless DC Motor · **B1230N2B**

Inner Rotor Without Sensor

	Characteristics		28-115-12.0	09-180-9.0	15-180-3.7
1	Voltage	V	12	9	3.7
2	Terminal resistance	Ω	9	2.4	0.6
3	No-load speed	rpm	11500	18000	18000
4	No-load current	A	0.05	0.15	0.23
5	Nominal torque	mNm	3.8	2.7	2.7
6	Nominal speed	rpm	6800	14100	12200
7	Nominal current	A	0.45	0.74	1.7
8	Max. output power	W	3.7	7.8	5.9
9	Max. efficiency	%	65	64	67
10	Back-EMF constant	mV/rpm	1.0	0.5	0.2
11	Torque constant	mNm/A	9.6	4.6	1.9
12	KV Value	rpm/V	960	2000	4860
13	Speed/torque gradient	rpm/mNm	930	1090	1430
14	Rotor inertia	gcm^2	0.21	0.21	0.21
15	Weight	g	15	15	15
16	Thermal resistance housing-ambient	K/W	24	24	24
17	Thermal resistance winding-housing	K/W	4.5	4.5	4.5
18	Thermal time constant motor	s	240	240	240
19	Thermal time constant winding	s	2	2	2
20	Operating temperature range	°C	-40 ~ +100	-40 ~ +100	-40 ~ +100
21	Thermal class of winding	°C	155	155	155
22	Axial play	mm	0.012	0.012	0.012
23	Radial play	mm	0.008	0.008	0.008
24	Axial load dynamic	N	1	1	1
25	Axial load static	N	25	25	25
26	Radial load at 3 mm from mounting face	N	6.3	6.3	6.3
27	No. of pole pairs		1	1	1
28	Bearings		2 ball bearings		
29	Commutation		Sensorless		
30	Protection class		IP 30		

Approx. actual size

Applications

Precision drives in medical equipment, industrial automation fields

Options

Lead wires length	Bearing type
Shaft length	Hall sensor
Special coils	Encoder
Gearheads	Driver

Dimension (mm) · B1230N2B

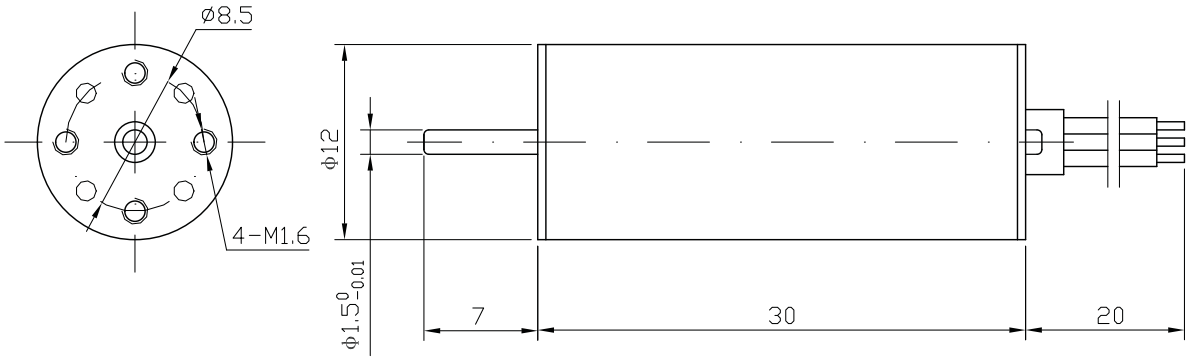

Brushless DC Motor · **B1233NH2B**

Inner Rotor With Sensor

	Characteristics		42-200-12.0
1	Voltage	V	12
2	Terminal resistance	Ω	3.3
3	No-load speed	rpm	20000
4	No-load current	A	0.15
5	Stall torque	mNm	19.2
6	Stall current	A	3.6
7	Nominal torque	mNm	1.1
8	Nominal speed	rpm	18900
9	Nominal current	A	0.35
10	Max. output power	W	10
11	Max. efficiency	%	63
12	Back-EMF constant	mV/rpm	0.6
13	Torque constant	mNm/A	5.5
14	KV value	rpm/V	1660
15	Speed/torque gradient	rpm/mNm	1040
16	Rotor inertia	gcm^2	0.21
17	Weight	g	16
18	Thermal resistance housing-ambient	K/W	24
19	Thermal resistance winding-housing	K/W	4.5
20	Thermal time constant motor	s	240
21	Thermal time constant winding	s	2
22	Operating temperature range	°C	-40 ~ +100
23	Thermal class of winding	°C	155
24	Axial play	mm	0.012
25	Radial play	mm	0.008
26	Axial load dynamic	N	1
27	Axial load static	N	25
28	Radial load at 3 mm from mounting face	N	6.3
29	No. of pole pairs		1
30	Bearings		2 ball bearings
31	Commutation		Hall sensor
32	Protection class		IP 20

Options	
Lead wires length	Bearing type
Shaft length	Hall sensor
Special coils	Encoder
Gearheads	Driver

Applications

Precision drives in medical equipment, industrial automation fields

Approx. actual size

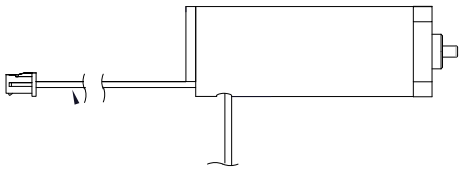

Dimension (mm) · B1233NH2B

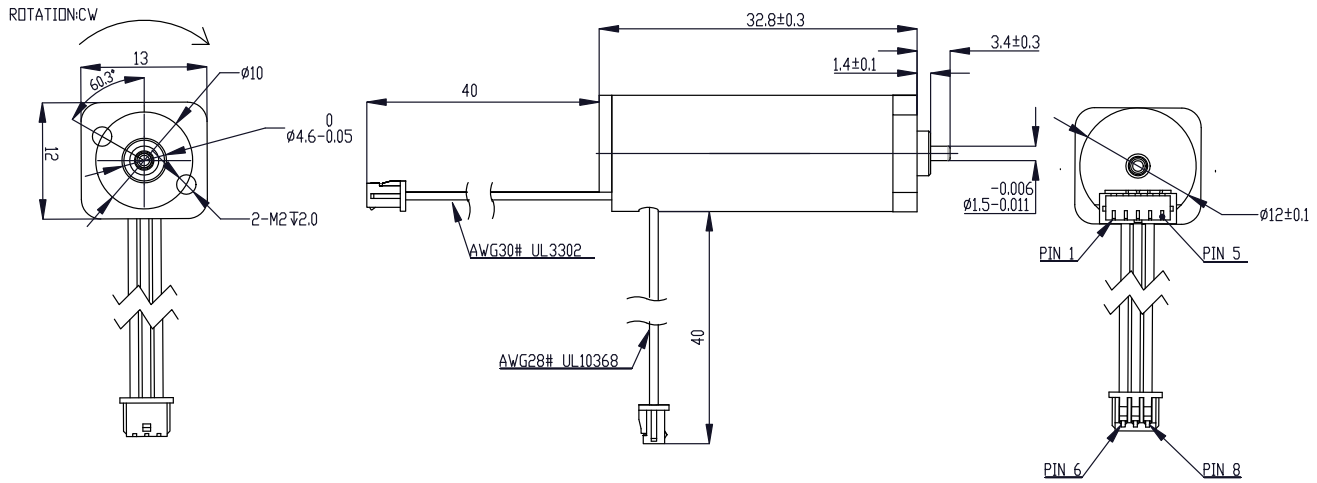

Brushless DC Motor · **B1250NH2B**

Inner Rotor With Sensor

	Characteristics		-145-24.0
1	Voltage	V	24
2	Terminal resistance	Ω	14.5
3	No-load speed	rpm	14500
4	No-load current	A	0.1
5	Stall torque	mNm	23
6	Stall current	A	1.7
7	Nominal torque	mNm	4.3
8	Nominal speed	rpm	10800
9	Nominal current	A	0.4
10	Max. output power	W	9
11	Max. efficiency	%	57
12	Back-EMF constant	mV/rpm	1.6
13	Torque constant	mNm/A	15.3
14	KV Value	rpm/V	600
15	Speed/torque gradient	rpm/mNm	600
16	Rotor inertia	gcm^2	4
17	Weight	g	29
18	Thermal resistance housing-ambient	K/W	16
19	Thermal resistance winding-housing	K/W	0.7
20	Thermal time constant motor	s	800
21	Thermal time constant winding	s	5
22	Operating temperature range	°C	-40 ~ +100
23	Thermal class of winding	°C	155
24	Axial play	mm	0.012
25	Radial play	mm	0.008
26	Axial load dynamic	N	5
27	Axial load static	N	80
28	Radial load at 3 mm from mounting face	N	29
29	No. of pole pairs		2
30	Bearings		2 ball bearings
31	Commutation		Hall sensor
32	Protection class		IP 20

Applications

Precision drives in medical equipment, industrial automation fields

Options	
Lead wires length	Bearing type
Shaft length	Hall sensor
Special coils	Encoder
Gearheads	Driver

Dimension (mm) · B1250NH2B – Approx. actual size

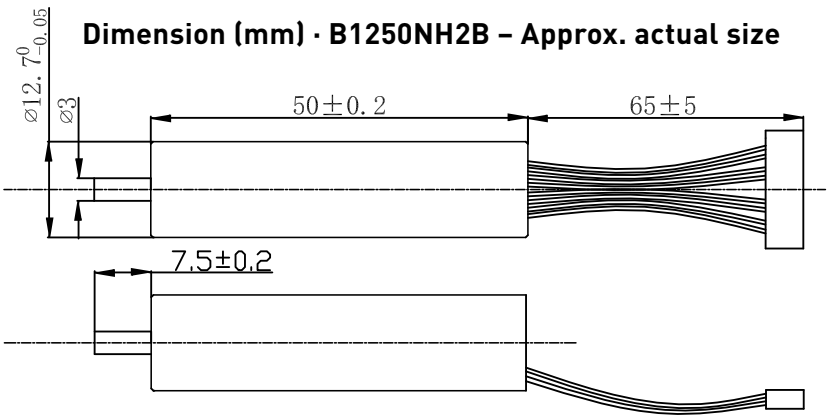

Brushless DC Motor · **B1329N2B**

Inner Rotor Without Sensor

	Characteristics		01-250-12.0
1	Voltage	V	12
2	Terminal resistance	Ω	7.5
3	No-load speed	rpm	25000
4	No-load current	A	0.1
5	Nominal torque	mNm	1.7
6	Nominal speed	rpm	15300
7	Nominal current	A	0.51
8	Max. output power	W	4.2
9	Max. efficiency	%	56.0
10	Back-EMF constant	mV/rpm	0.45
11	Torque constant	mNm/A	4.3
12	KV Value	rpm/V	2100
13	Speed/torque gradient	rpm/mNm	3900
14	Rotor inertia	gcm^2	0.18
15	Weight	g	15
16	Thermal resistance housing-ambient	K/W	24
17	Thermal resistance winding-housing	K/W	4.5
18	Thermal time constant motor	s	250
19	Thermal time constant winding	s	2
20	Operating temperature range	°C	-40 ~ +120
21	Thermal class of winding	°C	155
22	Axial play	mm	0.012
23	Radial play	mm	0.008
24	Axial load dynamic	N	1.5
25	Axial load static	N	37
26	Radial load at 3 mm from mounting face	N	12
27	No. of pole pairs		1
28	Bearings		2 ball bearings
29	Commutation		Sensorless
30	Protection class		IP 30

Approx. actual size

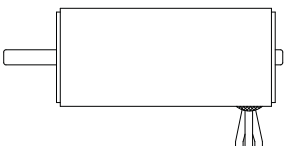

Applications

Precision drives in medical equipment, industrial automation fields

Options	
Lead wires length	Bearing type
Shaft length	Hall sensor
Special coils	Encoder
Gearheads	Driver

Dimension (mm) · B1329N2B

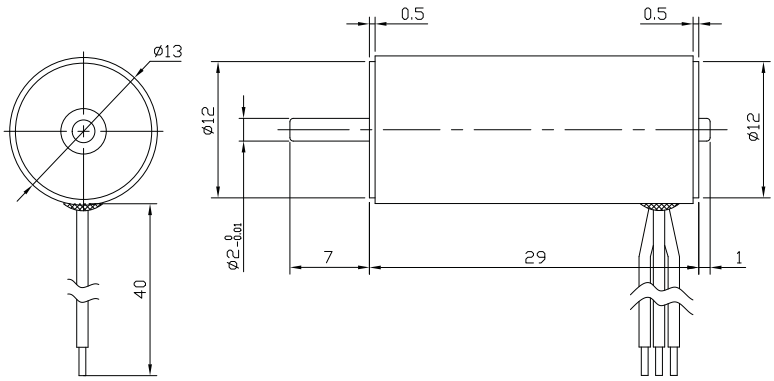

Brushless DC Motor · **B1635N2B**

Inner Rotor Without Sensor

	Characteristics		01-450-12.0
1	Voltage	V	12
2	Terminal resistance	Ω	0.35
3	No-load speed	rpm	45000
4	No-load current	A	0.35
5	Nominal torque	mNm	1.5
6	Nominal speed	rpm	43800
7	Nominal current	A	0.96
8	Max. output power	W	100
9	Max. efficiency	%	81
10	Back-EMF constant	mV/rpm	0.26
11	Torque constant	mNm/A	2.5
12	KV Value	rpm/V	3750
13	Speed/torque gradient	rpm/mNm	530
14	Rotor inertia	gcm^2	1.5
15	Weight	g	40
16	Thermal resistance housing-ambient	K/W	17
17	Thermal resistance winding-housing	K/W	4.8
18	Thermal time constant motor	s	250
19	Thermal time constant winding	s	6
20	Operating temperature range	°C	-40 ~ +120
21	Thermal class of winding	°C	155
22	Axial play	mm	0.012
23	Radial play	mm	0.008
24	Axial load dynamic	N	1.5
25	Axial load static	N	37
26	Radial load at 3 mm from mounting face	N	12
27	No. of pole pairs		1
28	Bearings		2 ball bearings
29	Commutation		Sensorless
30	Protection class		IP 20

Approx. actual size

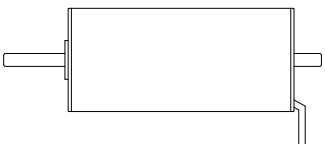

Applications

Precision drives in medical equipment, industrial automation fields

Options

Lead wires length	Bearing type
Shaft length	Hall sensor
Special coils	Encoder
Gearheads	Driver

Dimension (mm) · B1635N2B

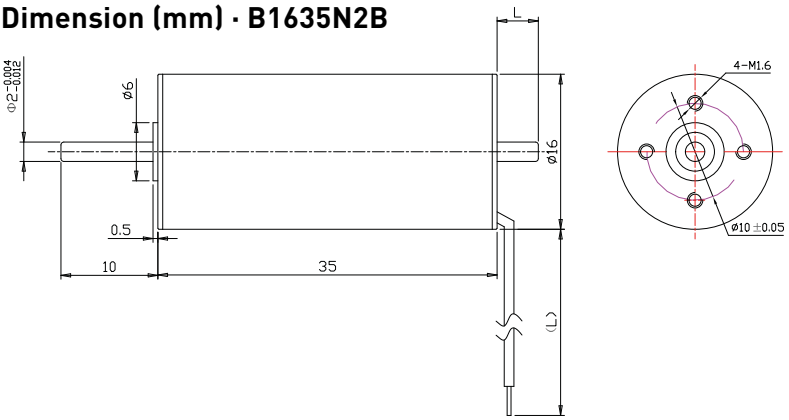

Brushless DC Motor · **BS1635NB2B**

Inner Rotor Without Sensor

	Characteristics		12-120-12.0
1	Voltage	V	12
2	Terminal resistance	Ω	7.3
3	No-load speed	rpm	12000
4	No-load current	A	0.09
5	Nominal torque	mNm	0.6
6	Nominal speed	rpm	11000
7	Nominal current	A	0.16
8	Max. output power	W	4
9	Max. efficiency	%	58
10	Back-EMF constant	mV/rpm	0.26
11	Torque constant	mNm/A	9.0
12	KV Value	rpm/V	1000
13	Speed/torque gradient	rpm/mNm	520
14	Rotor inertia	gcm^2	1.3
15	Weight	g	40
16	Thermal resistance housing-ambient	K/W	17
17	Thermal resistance winding-housing	K/W	4.8
18	Thermal time constant motor	s	250
19	Thermal time constant winding	s	6
20	Operating temperature range	°C	-40 ~ +120
21	Thermal class of winding	°C	155
22	Axial play	mm	0.012
23	Radial play	mm	0.008
24	Axial load dynamic	N	1.5
25	Axial load static	N	37
26	Radial load at 3 mm from mounting face	N	12
27	No. of pole pairs		2
28	Bearings		2 ball bearings
29	Commutation		Sensorless
30	Protection class		IP 20

Approx. actual size

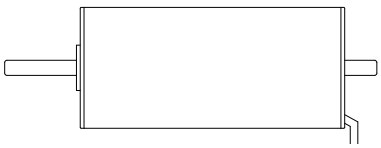

Applications

Precision drives in medical equipment, industrial automation fields

Options

Lead wires length	Bearing type
Shaft length	Hall sensor
Special coils	Encoder
Gearheads	Driver

Dimension (mm) · BS1635NB2B

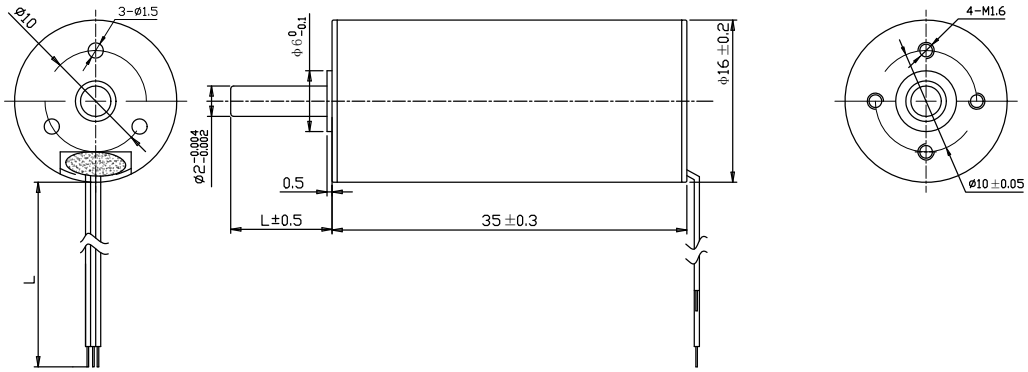

Brushless DC Motor · **BS1635NBH2B**

Inner Rotor With Sensor

	Characteristics		09-300-12.0
1	Voltage	V	12
2	Terminal resistance	Ω	3.5
3	No-load speed	rpm	30000
4	No-load current	A	0.30
5	Stall torque	mNm	11
6	Stall current	A	3.4
7	Nominal torque	mNm	0.6
8	Nominal speed	rpm	28000
9	Nominal current	A	0.4
10	Max. output power	W	6.0
11	Max. efficiency	%	51
12	Back-EMF constant	mV/rpm	2.25
13	Torque constant	mNm/A	3.5
14	KV value	rpm/V	2500
15	Speed/torque gradient	rpm/mNm	130
16	Rotor inertia	gcm^2	1.3
17	Weight	g	40
18	Thermal resistance housing-ambient	K/W	14
19	Thermal resistance winding-housing	K/W	2.8
20	Thermal time constant motor	s	620
21	Thermal time constant winding	s	4
22	Operating temperature range	°C	-40 ~ +100
23	Thermal class of winding	°C	155
24	Axial play	mm	0.012
25	Radial play	mm	0.008
26	Axial load dynamic	N	5
27	Axial load static	N	80
28	Radial load at 3 mm from mounting face	N	29
29	No. of pole pairs		2
30	Bearings		2 ball bearings
31	Commutation		Hall sensor
32	Protection class		IP 30

Approx. actual size

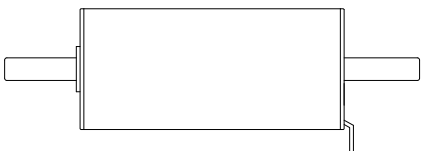

Applications

Precision drives in medical equipment, industrial automation fields

Options

Lead wires length	Bearing type
Shaft length	Hall sensor
Special coils	Encoder
Gearheads	Driver

Dimension (mm) · BS1635NBH2B

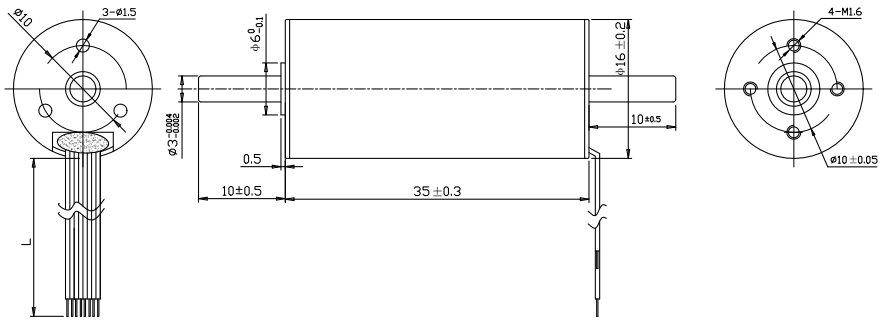

Brushless DC Motor · **B1659NH2B**

Inner Rotor, Slotless, Sensored

	Characteristics		01-425-32.0-0030	03-645-36.0-****
1	Voltage	V	32.0	36.0
2	Terminal resistance	Ω	1.42	0.58
3	No-load speed	rpm	41000	64500
4	No-load current	A	0.12	0.18
5	Stall torque	mNm	166.2	328.9
6	Stall current	A	22.5	62.1
7	Nominal torque	mNm	8.6	11.5
8	Nominal speed	rpm	38880	62240
9	Nominal current	A	1.31	2.35
10	Max. output power	W	179	556
11	Max. efficiency	%	86.0	89.6
12	Back-EMF constant	mV/rpm	0.776	0.557
13	Torque constant	mNm/A	7.41	5.31
14	KV value	rpm/V	1280	1790
15	Speed/torque gradient	rpm/mNm	247	196
16	Rotor inertia	gcm^2	0.65	0.65
17	Weight	g	51.5	52.0
18	Thermal resistance housing-ambient	K/W	15.3	
19	Thermal resistance winding-housing	K/W	18.7	
20	Thermal time constant motor	s	362	
21	Thermal time constant winding	s	233	
22	Operating temperature range	°C	-40 ~ +120	
23	Thermal class of winding	°C	155	
24	Axial play	mm	0.012	
25	Radial play	mm	0.008	
26	Axial load dynamic	N	1.5	
27	Axial load static	N	60	
28	Radial load at 3 mm from mounting face	N	10	
29	No. of pole pairs		1	
30	Bearings		2 ball bearings	
31	Commutation		Hall sensor	
32	Protection class		IP 20	

Approx. actual size

Applications

Precision drives in medical equipment, industrial automation fields

Options

Lead wires length	Bearing type
Shaft length	Hall sensor
Special coils	Encoder
Gearheads	Driver

Dimension (mm) · B1659NH2B

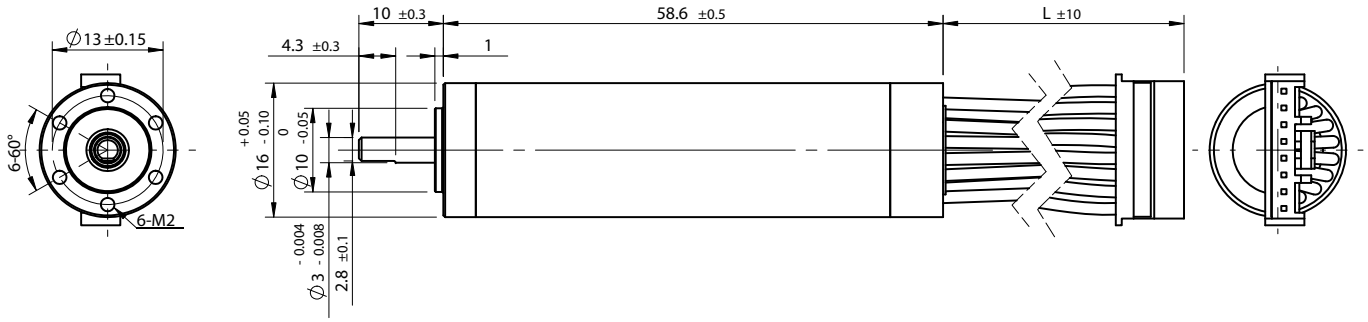

Brushless DC Motor · **B2040N2B**

Inner Rotor Without Sensor

	Characteristics		01-150-12.0	02-80-12.0	03-67-9.0
1	Voltage	V	12	12	9
2	Terminal resistance	Ω	1.1	3.6	2.5
3	No-load speed	rpm	15000	8000	6700
4	No-load current	A	0.25	0.22	0.2
5	Nominal torque	mNm	7.6	7.6	10.2
6	Nominal speed	rpm	13000	5900	4300
7	Nominal current	A	1.3	0.8	1.1
8	Max. output power	W	31	8.7	7.2
9	Max. efficiency	%	72	55	58
10	Back-EMF constant	mV/rpm	0.78	1.4	1.3
11	Torque constant	mNm/A	7.5	13.4	12.1
12	KV Value	rpm/V	1250	670	745
13	Speed/torque gradient	rpm/mNm	190	190	163
14	Rotor inertia	gcm^2	2	2	2
15	Weight	g	55	55	55
16	Thermal resistance housing-ambient	K/W	16	16	16
17	Thermal resistance winding-housing	K/W	3.5	3.5	3.5
18	Thermal time constant motor	s	620	620	620
19	Thermal time constant winding	s	4	4	4
20	Operating temperature range	°C	-40 ~ +100	-40 ~ +100	-40 ~ +100
21	Thermal class of winding	°C	155	155	155
22	Axial play	mm	0.012	0.012	0.012
23	Radial play	mm	0.008	0.008	0.008
24	Axial load dynamic	N	5	5	5
25	Axial load static	N	80	80	80
26	Radial load at 3 mm from mounting face	N	29	29	29
27	No. of pole pairs		1	1	1
28	Bearings		2 ball bearings		
29	Commutation		Sensorless		
30	Protection class		IP 20		

Applications

Precision drives in medical equipment, industrial automation fields

Options

Lead wires length	Bearing type
Shaft length	Hall sensor
Special coils	Encoder
Gearheads	Driver

Approx. actual size

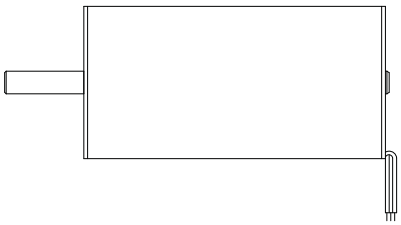

Dimension (mm) · B2040N2B

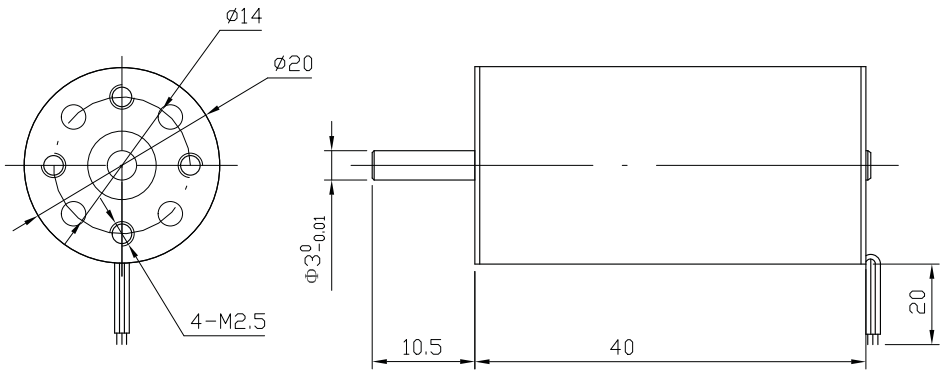

Brushless DC Motor · **B2040NIE2B**

Interior Rotor With Integrated Driver

	Characteristics		01-29-6.5
1	Voltage	V	6.5
2	Operating voltage	V	5.8 ~ 10
3	Terminal resistance	Ω	42
4	No-load speed	rpm	2900
5	No-load current	A	0.02
6	Nominal torque	mNm	1.4
7	Nominal speed	rpm	1200
8	Nominal current	A	0.1
9	Max. output power	W	0.18
10	Max. efficiency	%	38
11	Back-EMF constant	mV/rpm	1.9
12	Torque constant	mNm/A	18
13	KV value	rpm/V	450
14	Speed/torque gradient	rpm/mNm	1200
15	Rotor inertia	gcm^2	6.95
16	Weight	g	47
17	Thermal resistance housing-ambient	K/W	8
18	Thermal resistance winding-housing	K/W	10
19	Thermal time constant motor	s	800
20	Thermal time constant winding	s	7
21	Operating temperature range	°C	-40 ~ +100
22	Thermal class of winding	°C	130
23	Axial play	mm	0.012
24	Radial play	mm	0.008
25	Axial load dynamic	N	5
26	Axial load static	N	80
27	Radial load at 3 mm from mounting face	N	29
28	No. of pole pairs		1
29	Bearings		2 ball bearings
30	Commutation		Sensorless
31	Protection class		IP 42

Applications

Precision drives in medical equipment, industrial automation fields

Options	
Lead wires length	Gearheads
Shaft length	Bearing type
Special coils	

Approx. actual size

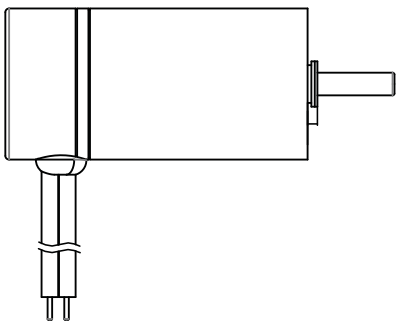

Dimension (mm) · B2040NIE2B

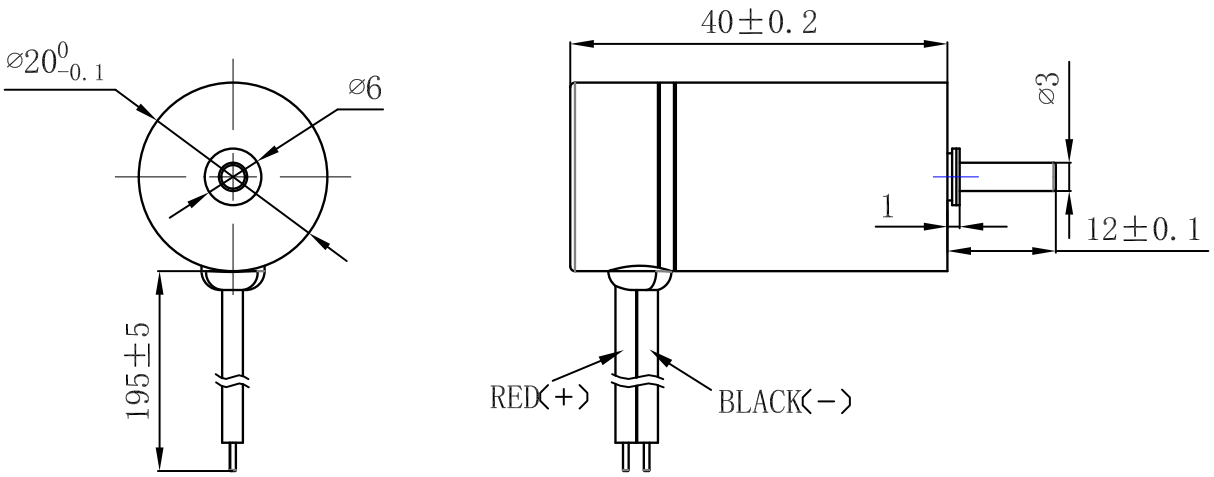

Brushless DC Motor · **B2135NIE2B**

Interior Rotor With Integrated Driver

	Characteristics		01-65-12.0
1	Voltage	V	12
2	Operating voltage	V	8 ~ 15
3	Terminal resistance	Ω	14
4	No-load speed	rpm	6500
5	No-load current	A	0.1
6	Nominal torque	mNm	8.6
7	Nominal speed	rpm	1800
8	Nominal current	A	0.65
9	Max. output power	W	2.00
10	Max. efficiency	%	43
11	Back-EMF constant	mV/rpm	1.63
12	Torque constant	mNm/A	15.6
13	KV value	rpm/V	540
14	Speed/torque gradient	rpm/mNm	550
15	Rotor inertia	gcm^2	2.1
16	Weight	g	50
17	Thermal resistance housing-ambient	K/W	1.8
18	Thermal resistance winding-housing	K/W	16
19	Thermal time constant motor	s	600
20	Thermal time constant winding	s	3
21	Operating temperature range	°C	-40 ~ +100
22	Thermal class of winding	°C	155
23	Axial play	mm	0.012
24	Radial play	mm	0.008
25	Axial load dynamic	N	1.5
26	Axial load static	N	37
27	Radial load at 3 mm from mounting face	N	12
28	No. of pole pairs		1
29	Bearings		2 ball bearings
30	Commutation		Sensorless
31	Protection class		IP 30

Applications

Precision drives in medical equipment, industrial automation fields

Options	
Lead wires length	Gearheads
Shaft length	Bearing type
Special coils	

Approx. actual size

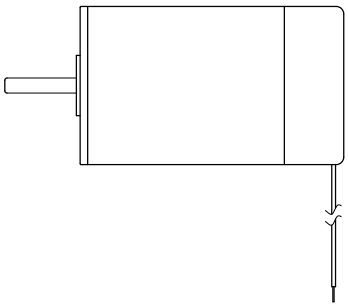

Dimension (mm) · B2135NIE2B

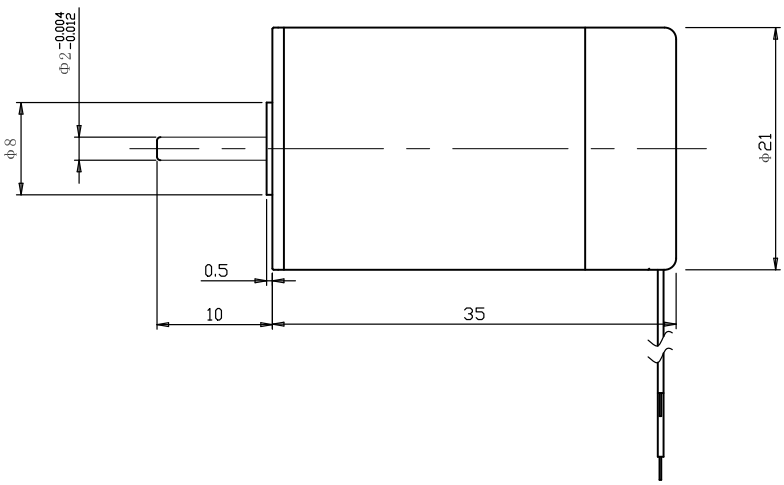

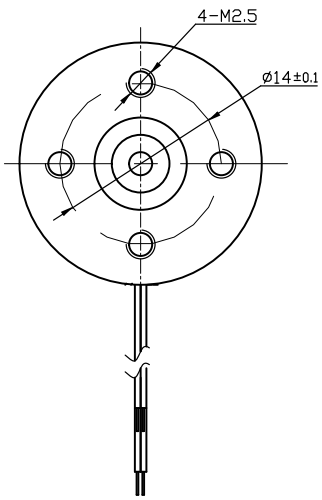

Brushless DC Motor · **B2440NH2B**

Inner Rotor With Sensor

	Characteristics		01-170-24.0
1	Voltage	V	24
2	Terminal resistance	Ω	2.5
3	No-load speed	rpm	17000
4	No-load current	A	0.15
5	Stall torque	mNm	125.00
6	Stall current	A	9.60
7	Nominal torque	mNm	18.2
8	Nominal speed	rpm	14500
9	Nominal current	A	1.52
10	Max. output power	W	56
11	Max. efficiency	%	76
12	Back-EMF constant	mV/rpm	1.39
13	Torque constant	mNm/A	13.2
14	KV value	rpm/V	708
15	Speed/torque gradient	rpm/mNm	136
16	Rotor inertia	gcm^2	2
17	Weight	g	80
18	Thermal resistance housing-ambient	K/W	9
19	Thermal resistance winding-housing	K/W	3.5
20	Thermal time constant motor	s	620
21	Thermal time constant winding	s	4
22	Operating temperature range	°C	-40 ~ +120
23	Thermal class of winding	°C	155
24	Axial play	mm	0.012
25	Radial play	mm	0.008
26	Axial load dynamic	N	5
27	Axial load static	N	80
28	Radial load at 3 mm from mounting face	N	29
29	No. of pole pairs		1
30	Bearings		2 ball bearings
31	Commutation		Hall sensor
32	Protection class		IP 30

Approx. actual size

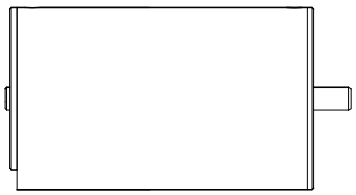

Applications

Precision drives in medical equipment, industrial automation fields

Options

Lead wires length	Bearing type
Shaft length	Hall sensor
Special coils	Encoder
Gearheads	Driver

Dimension (mm) · B2440NH2B

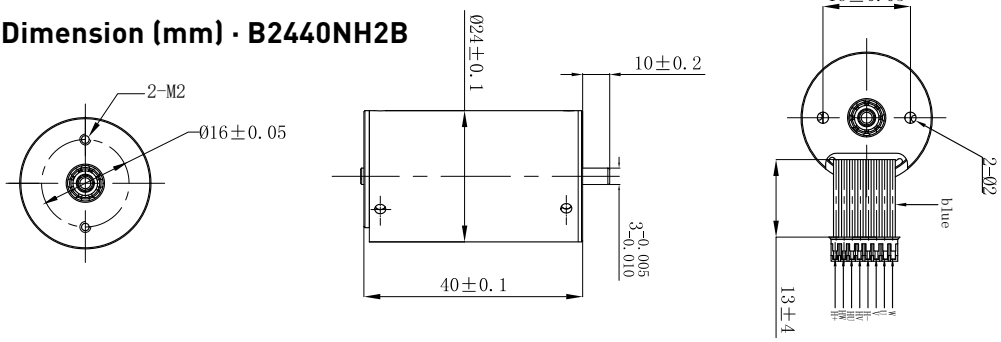

Brushless DC Motor · **BS2835NB2B**

Inner Rotor Without Sensor

	Characteristics		01-110-24.0
1	Voltage	V	24
2	Terminal resistance	Ω	1.6
3	No-load speed	rpm	11000
4	No-load current	A	0.15
5	Nominal torque	mNm	9.7
6	Nominal speed	rpm	10600
7	Nominal current	A	0.6
8	Max. output power	W	88
9	Max. efficiency	%	80
10	Back-EMF constant	mV/rpm	0.27
11	Torque constant	mNm/A	20.0
12	KV Value	rpm/V	458
13	Speed/torque gradient	rpm/mNm	407
14	Rotor inertia	gcm^2	13
15	Weight	g	80
16	Thermal resistance housing-ambient	K/W	17.3
17	Thermal resistance winding-housing	K/W	4
18	Thermal time constant motor	s	600
19	Thermal time constant winding	s	3
20	Operating temperature range	°C	-40 ~ +100
21	Thermal class of winding	°C	155
22	Axial play	mm	0.012
23	Radial play	mm	0.008
24	Axial load dynamic	N	5
25	Axial load static	N	80
26	Radial load at 3 mm from mounting face	N	29
27	No. of pole pairs		2
28	Bearings		2 ball bearings
29	Commutation		Sensorless
30	Protection class		IP 20

Applications

Precision drives in medical equipment, industrial automation fields

Options	
Lead wires length	Bearing type
Shaft length	Hall sensor
Special coils	Encoder
Gearheads	Driver

Dimension (mm) · BS2835NB2B

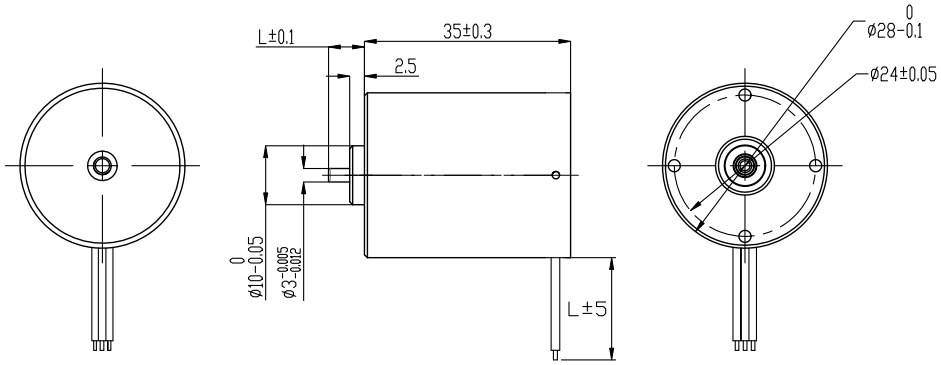

Approx. actual size

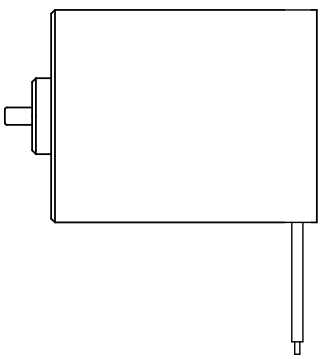

Brushless DC Motor · **B2950NH2B**

Inner Rotor With Sensor

	Characteristics		01-130-24.0
1	Voltage	V	24
2	Terminal resistance	Ω	1.32
3	No-load speed	rpm	13000
4	No-load current	A	0.30
5	Stall torque	mNm	310
6	Stall current	A	18
7	Nominal torque	mNm	28
8	Nominal speed	rpm	11800
9	Nominal current	A	1.9
10	Max. output power	W	105
11	Max. efficiency	%	75
12	Back-EMF constant	mV/rpm	1.8
13	Torque constant	mNm/A	17.3
14	KV value	rpm/V	540
15	Speed/torque gradient	rpm/mNm	42
16	Rotor inertia	gcm^2	5
17	Weight	g	140
18	Thermal resistance housing-ambient	K/W	7.8
19	Thermal resistance winding-housing	K/W	5.9
20	Thermal time constant motor	s	1400
21	Thermal time constant winding	s	20
22	Operating temperature range	°C	-40 ~ +100
23	Thermal class of winding	°C	155
24	Axial play	mm	0.012
25	Radial play	mm	0.008
26	Axial load dynamic	N	5
27	Axial load static	N	80
28	Radial load at 3 mm from mounting face	N	29
29	No. of pole pairs		2
30	Bearings		2 ball bearings
31	Commutation		Hall sensor
32	Protection class		IP 20

Applications

Precision drives in medical equipment, industrial automation fields

Options

Lead wires length	Bearing type
Shaft length	Hall sensor
Special coils	Encoder
Gearheads	Driver

Dimension (mm) · B2950NH2B

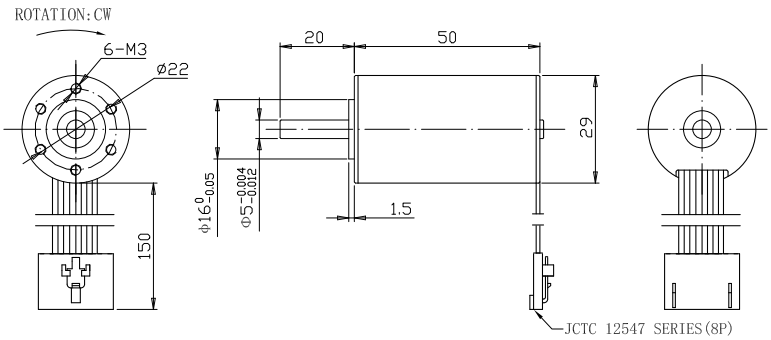

Approx. actual size

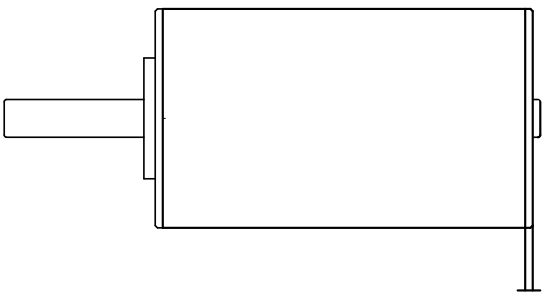

Brushless DC Motor · **BS3240NBH2B**

Inner Rotor With Sensor

	Characteristics		01-33-6.0
1	Voltage	V	6
2	Terminal resistance	Ω	1.3
3	No-load speed	rpm	3300
4	No-load current	A	0.15
5	Stall torque	mNm	74.00
6	Stall current	A	4.60
7	Nominal torque	mNm	2.2
8	Nominal speed	rpm	3200
9	Nominal current	A	0.28
10	Max. output power	W	6
11	Max. efficiency	%	66
12	Back-EMF constant	mV/rpm	1.8
13	Torque constant	mNm/A	16.5
14	KV value	rpm/V	550
15	Speed/torque gradient	rpm/mNm	445
16	Rotor inertia	gcm^2	24
17	Weight	g	55
18	Thermal resistance housing-ambient	K/W	16
19	Thermal resistance winding-housing	K/W	3.5
20	Thermal time constant motor	s	620
21	Thermal time constant winding	s	4
22	Operating temperature range	°C	-40 ~ +120
23	Thermal class of winding	°C	155
24	Axial play	mm	0.012
25	Radial play	mm	0.008
26	Axial load dynamic	N	5
27	Axial load static	N	80
28	Radial load at 3 mm from mounting face	N	29
29	No. of pole pairs		2
30	Bearings		2 ball bearings
31	Commutation		Hall sensor
32	Protection class		IP 30

Applications

Precision drives in medical equipment, industrial automation fields

Options	
Lead wires length	Bearing type
Shaft length	Hall sensor
Special coils	Encoder
Gearheads	Driver

Approx. actual size

Dimension (mm) · BS3240NBH2B

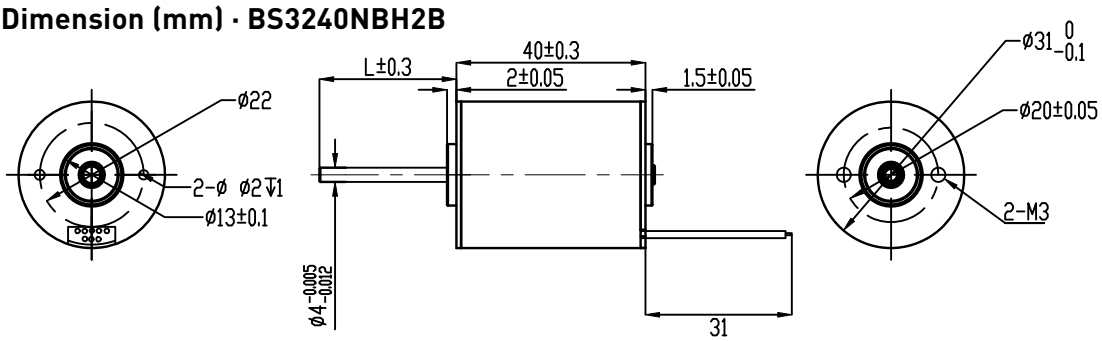

Brushless DC Motor · **B3265NH2B**

Inner Rotor With Sensor

	Characteristics		01-150-24.0
1	Voltage	V	24
2	Terminal resistance	Ω	0.65
3	No-load speed	rpm	15000
4	No-load current	A	0.55
5	Stall torque	mNm	548
6	Stall current	A	37
7	Nominal torque	mNm	22
8	Nominal speed	rpm	14400
9	Nominal current	A	1.95
10	Max. output power	W	215
11	Max. efficiency	%	78
12	Back-EMF constant	mV/rpm	1.578
13	Torque constant	mNm/A	15
14	KV value	rpm/V	625
15	Speed/torque gradient	rpm/mNm	42
16	Rotor inertia	gcm^2	6
17	Weight	g	180
18	Thermal resistance housing-ambient	K/W	6.8
19	Thermal resistance winding-housing	K/W	4.3
20	Thermal time constant motor	s	1400
21	Thermal time constant winding	s	20
22	Operating temperature range	°C	-40 ~ +100
23	Thermal class of winding	°C	155
24	Axial play	mm	0.012
25	Radial play	mm	0.008
26	Axial load dynamic	N	5
27	Axial load static	N	80
28	Radial load at 3 mm from mounting face	N	29
29	No. of pole pairs		2
30	Bearings		2 ball bearings
31	Commutation		Hall sensor
32	Protection class		IP 20

Applications

Precision drives in medical equipment, industrial automation fields

Options	
Lead wires length	Bearing type
Shaft length	Hall sensor
Special coils	Encoder
Gearheads	Driver

Dimension (mm) · B3265NH2B

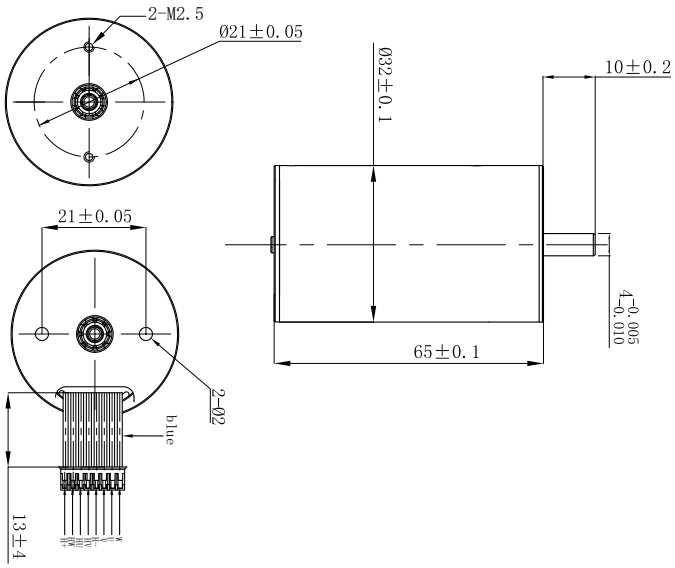

Approx. actual size

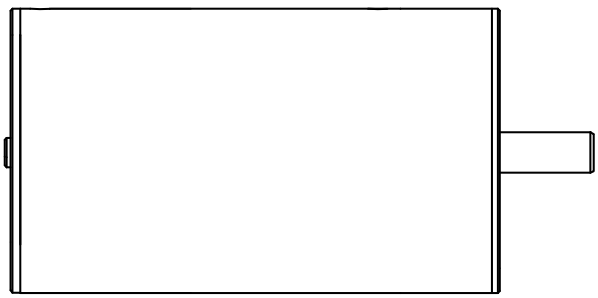

Brushless DC Motor · **B4040NH2B**

Inner Rotor With Sensor

	Characteristics		02-420-24.0
1	Voltage	V	24
2	Terminal resistance	Ω	2
3	No-load speed	rpm	42000
4	No-load current	A	0.17
5	Stall torque	mNm	64
6	Stall current	A	12
7	Nominal torque	mNm	6.4
8	Nominal speed	rpm	36000
9	Nominal current	A	1.36
10	Max. output power	W	70
11	Max. efficiency	%	78
12	Back-EMF constant	mV/rpm	0.56
13	Torque constant	mNm/A	5.3
14	KV value	rpm/V	1750
15	Speed/torque gradient	rpm/mNm	660
16	Rotor inertia	gcm^2	20
17	Weight	g	200
18	Thermal resistance housing-ambient	K/W	9
19	Thermal resistance winding-housing	K/W	2.4
20	Thermal time constant motor	s	1400
21	Thermal time constant winding	s	20
22	Operating temperature range	°C	-40 ~ +120
23	Thermal class of winding	°C	155
24	Axial play	mm	2.3
25	Radial play	mm	0.012
26	Axial load dynamic	N	8
27	Axial load static	N	110
28	Radial load at 3 mm from mounting face	N	31
29	No. of pole pairs		2
30	Bearings		2 ball bearings
31	Commutation		Hall sensor
32	Protection class		IP 20

Applications

Precision drives in medical equipment, industrial automation fields

Options	
Lead wires length	Bearing type
Shaft length	Hall sensor
Special coils	Encoder
Gearheads	Driver

Dimension (mm) · B4040NH2B

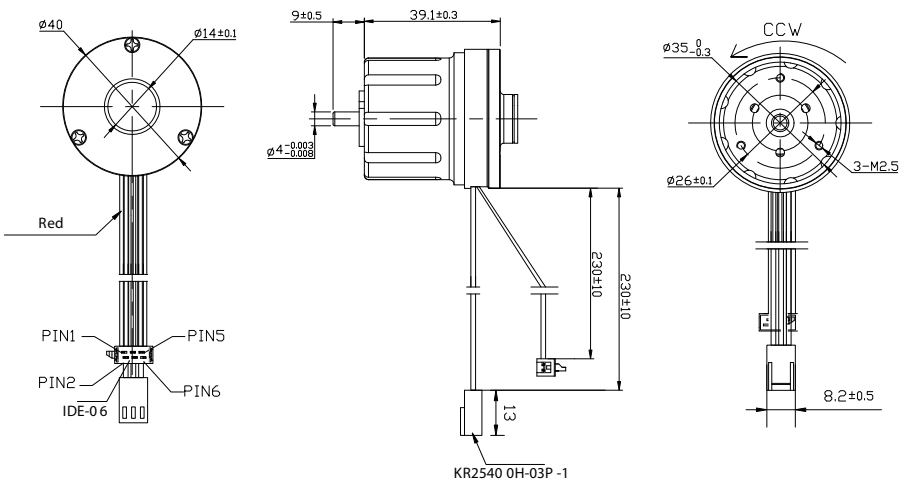

Approx. actual size

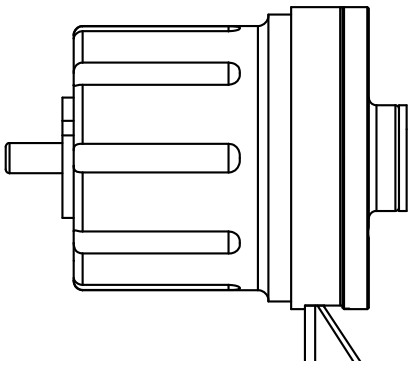

Brushless DC Motor · **B7584FBHIE2B**

Interior Rotor With Integrated Driver

	Characteristics		01-63-24.0
1	Voltage	V	24
2	Operating voltage	V	12 ~ 26
3	Terminal resistance	Ω	2.8
4	No-load speed	rpm	6300
5	No-load current	A	0.3
6	Nominal torque	mNm	106
7	Nominal speed	rpm	4000
8	Nominal current	A	3.2
9	Max. output power	W	49
10	Max. efficiency	%	69
11	Back-EMF constant	mV/rpm	3.7
12	Torque constant	mNm/A	35
13	KV value	rpm/V	263
14	Speed/torque gradient	rpm/mNm	21
15	Rotor inertia	gcm^2	28
16	Weight	g	1160
17	Thermal resistance housing-ambient	K/W	2
18	Thermal resistance winding-housing	K/W	3
19	Thermal time constant motor	s	112
20	Thermal time constant winding	s	8.9
21	Operating temperature range	°C	-40 ~ +100
22	Thermal class of winding	°C	130
23	Axial play	mm	4
24	Radial play	mm	0.3
25	Axial load dynamic	N	10
26	Axial load static	N	300
27	Radial load at 3 mm from mounting face	N	215
28	No. of pole pairs		2
29	Bearings		2 ball bearings
30	Commutation		Hall sensor
31	Protection class		IP 30

Applications

Precision drives in medical equipment, industrial automation fields

Options	
Lead wires length	Gearheads
Shaft length	Bearing type
Special coils	

Approx. actual size

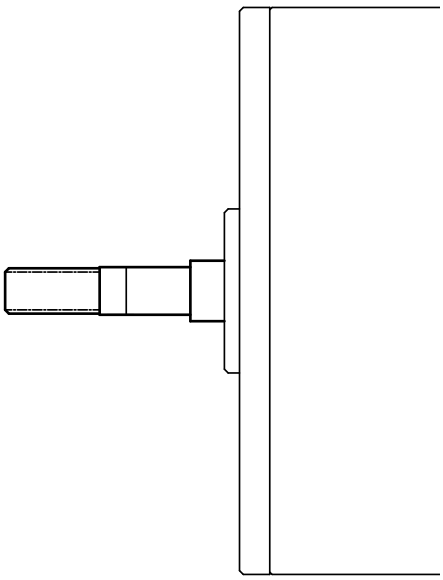

Dimension (mm) · B7584FBHIE2B

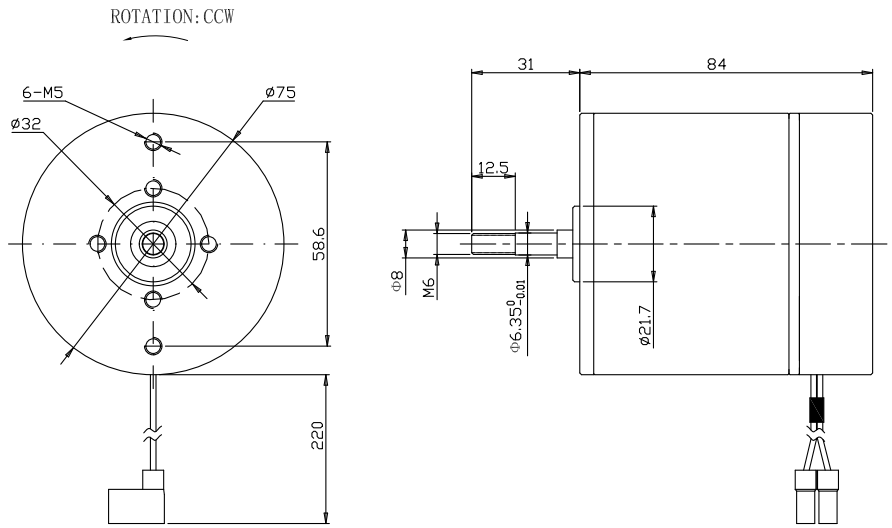

Brushless DC Motor · **BO1410NB2B**

Outer Rotor Without Sensor

	Characteristics		02-81-6.0
1	Voltage	V	6
2	Terminal resistance	Ω	13.4
3	Terminal inductance	mH	0.74
4	No-load speed	rpm	8100
5	No-load current	A	0.04
6	Nominal torque	mNm	1.8
7	Nominal speed	rpm	--
8	Nominal current	A	0.3
9	Max. output power	W	0.6
10	Max. efficiency	%	52
11	Back-EMF constant	mV/rpm	0.7
12	Torque constant	mNm/A	6.5
13	Speed/torque gradient	rpm/mNm	3010
14	Rotor inertia	gcm^2	0.6
15	Weight	g	5.1
16	Thermal resistance housing-ambient	K/W	16
17	Thermal resistance winding-housing	K/W	15.3
18	Thermal time constant motor	s	105
19	Thermal time constant winding	s	28
20	Operating temperature range	°C	-40 ~ +120
21	Thermal class of winding	°C	155
22	Axial play	mm	0.012
23	Radial play	mm	0.008
24	Axial load dynamic	N	1
25	Axial load static	N	25
26	Radial load at 3 mm from mounting face	N	6.3
27	No. of pole pairs		4
28	Bearings		2 ball bearings
29	Commutation		Sensorless
30	Protection class		IP 30

Applications

UAV gimbals and handheld gimbals

Options	
Lead wires length	Bearing type
Shaft length	Hall sensor
Special coils	Encoder
Gearheads	Driver

Approx. actual size

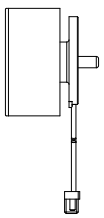

Dimension (mm) · BO1410NB2B

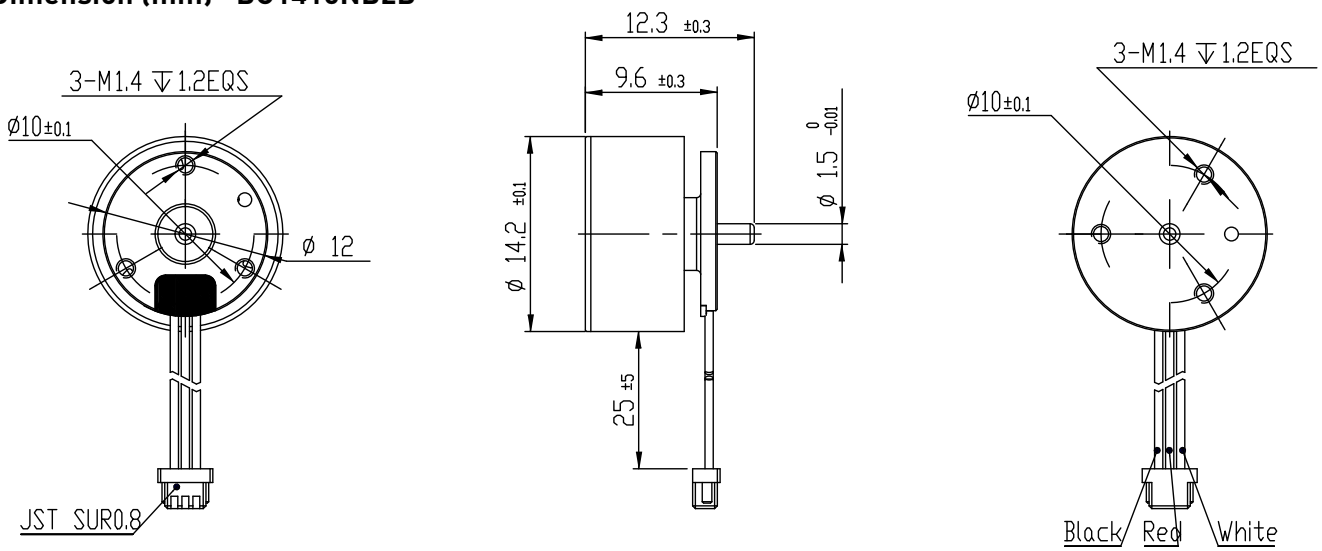

Brushless DC Motor · **BO1509NBH2B**

Outer Rotor Without Sensor

	Characteristics		01-280-7.6
1	Voltage	V	7.6
2	Terminal resistance	Ω	4.0
3	Terminal inductance	mH	0.21
4	No-load speed	rpm	28000
5	No-load current	A	0.10
6	Nominal torque	mNm	1.7
7	Nominal speed	rpm	12200
8	Nominal current	A	0.8
9	Max. output power	W	3.2
10	Max. efficiency	%	59
11	Back-EMF constant	mV/rpm	0.2
12	Torque constant	mNm/A	2.4
13	Speed/torque gradient	rpm/mNm	6334
14	Rotor inertia	gcm^2	0.5
15	Weight	g	4.4
16	Thermal resistance housing-ambient	K/W	16.1
17	Thermal resistance winding-housing	K/W	10.2
18	Thermal time constant motor	s	87
19	Thermal time constant winding	s	30
20	Operating temperature range	°C	-40 ~ +120
21	Thermal class of winding	°C	155
22	Axial play	mm	0.012
23	Radial play	mm	0.008
24	Axial load dynamic	N	1.5
25	Axial load static	N	37
26	Radial load at 3 mm from mounting face	N	12
27	No. of pole pairs		4
28	Bearings		2 ball bearings
29	Commutation		Linear Hall sensor
30	Protection class		IP 30

Applications

UAV gimbals and handheld gimbals

Options	
Lead wires length	Bearing type
Shaft length	Hall sensor
Special coils	Encoder
Gearheads	Driver

Approx. actual size

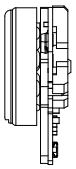

Dimension (mm) · BO1509NBH2B

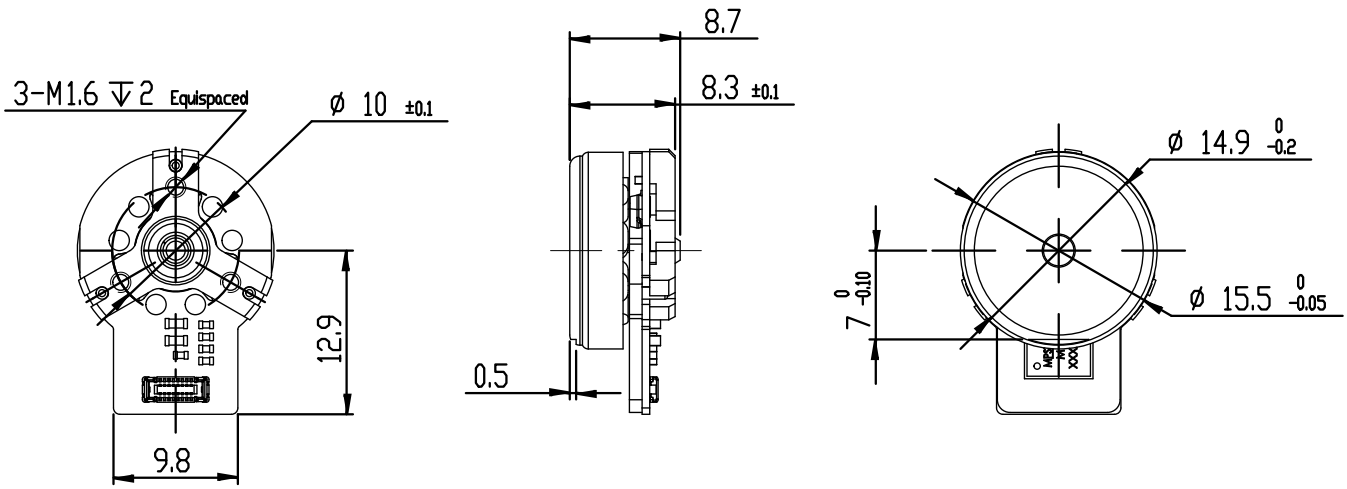

Brushless DC Motor · **BO1511N2B**

Outer Rotor Without Sensor

	Characteristics		03-350-7.4
1	Voltage	V	7.4
2	Terminal resistance	Ω	0.45
3	No-load speed	rpm	35000
4	No-load current	A	0.4
5	Nominal torque	mNm	3.3
6	Nominal speed	rpm	30000
7	Nominal current	A	2.1
8	Max. output power	W	29
9	Max. efficiency	%	71
10	Back-EMF constant	mV/rpm	0.21
11	Torque constant	mNm/A	1.97
12	KV value	rpm/V	4700
13	Speed/torque gradient	rpm/mNm	1100
14	Rotor inertia	gcm^2	0.6
15	Weight	g	5.8
16	Thermal resistance housing-ambient	K/W	10
17	Thermal resistance winding-housing	K/W	9
18	Thermal time constant motor	s	80
19	Thermal time constant winding	s	32
20	Operating temperature range	°C	-40 ~ +120
21	Thermal class of winding	°C	180
22	Axial play	mm	0.012
23	Radial play	mm	0.008
24	Axial load dynamic	N	1
25	Axial load static	N	25
26	Radial load at 3 mm from mounting face	N	6.3
27	No. of pole pairs		6
28	Bearings		2 ball bearings
29	Commutation		Sensorless
30	Protection class		IP 20

Applications

UAV, Aeromodelling, etc.

Options	
Lead wires length	Bearing type
Shaft length	Encoder
Special coils	Driver
Gearheads	

Dimension (mm) · BO1511N2B

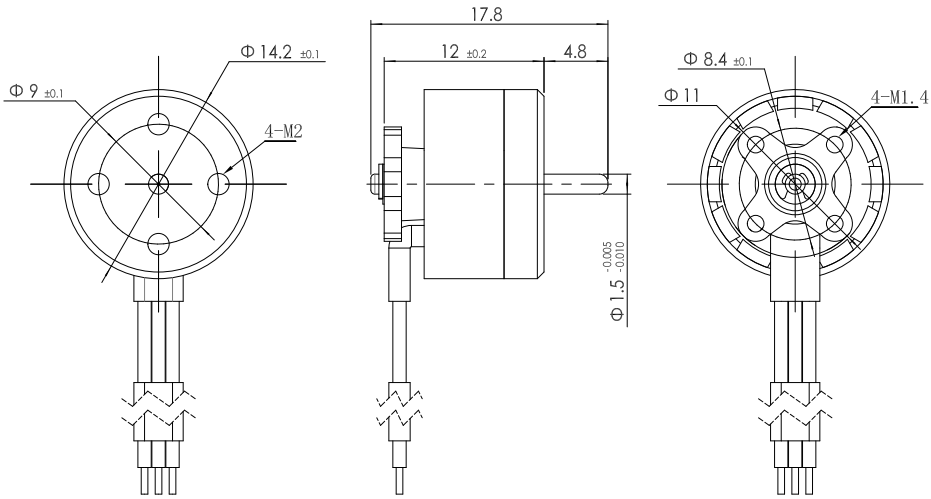

Approx. actual size

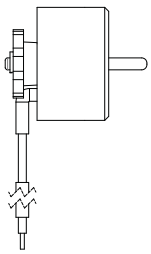

Brushless DC Motor · **BO1613N2B**

Outer Rotor Without Sensor

	Characteristics		01-228-7.4
1	Voltage	V	7.4
2	Terminal resistance	Ω	0.49
3	No-load speed	rpm	22800
4	No-load current	A	0.28
5	Nominal torque	mNm	5.4
6	Nominal speed	rpm	20000
7	Nominal current	A	1.8
8	Max. output power	W	26
9	Max. efficiency	%	74
10	Back-EMF constant	mV/rpm	0.32
11	Torque constant	mNm/A	3
12	KV value	rpm/V	3000
13	Speed/torque gradient	rpm/mNm	506
14	Rotor inertia	gcm^2	1.7
15	Weight	g	7.8
16	Thermal resistance housing-ambient	K/W	15.7
17	Thermal resistance winding-housing	K/W	25.6
18	Thermal time constant motor	s	123
19	Thermal time constant winding	s	100
20	Operating temperature range	°C	-40 ~ +120
21	Thermal class of winding	°C	155
22	Axial play	mm	0.012
23	Radial play	mm	0.008
24	Axial load dynamic	N	1
25	Axial load static	N	25
26	Radial load at 3 mm from mounting face	N	6.3
27	No. of pole pairs		5
28	Bearings		2 ball bearings
29	Commutation		Sensorless
30	Protection class		IP 20

Applications

UAV, Aeromodelling, etc.

Options	
Lead wires length	Bearing type
Shaft length	Encoder
Special coils	Driver
Gearheads	

Dimension (mm) · BO1613N2B

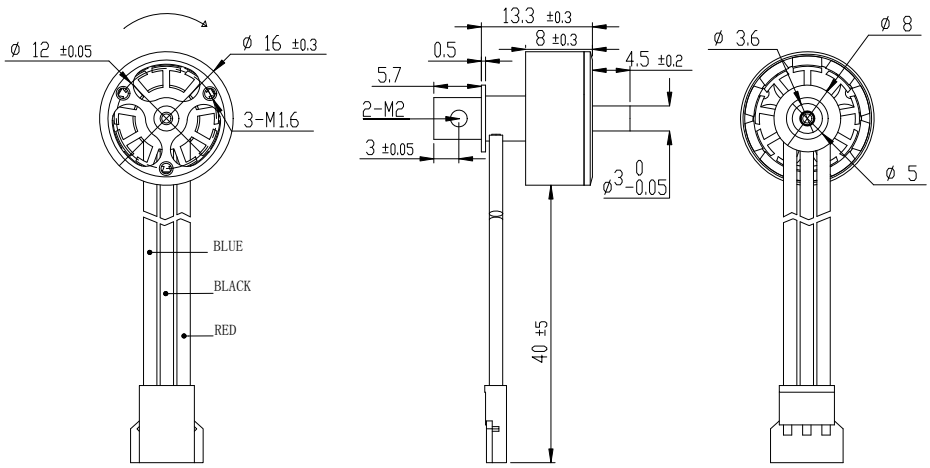

Approx. actual size

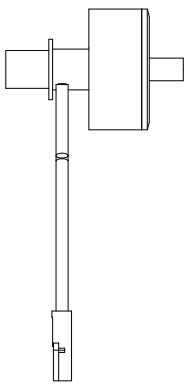

Brushless DC Motor · **BO1709NB2B**

Outer Rotor Without Sensor

	Characteristics		01-260-10.0
1	Voltage	V	10
2	Terminal resistance	Ω	4.3
3	Terminal inductance	mH	0.46
4	No-load speed	rpm	26000
5	No-load current	A	0.12
6	Nominal torque	mNm	1.9
7	Nominal speed	rpm	16900
8	Nominal current	A	0.7
9	Max. output power	W	5.2
10	Max. efficiency	%	60
11	Back-EMF constant	mV/rpm	0.4
12	Torque constant	mNm/A	3.5
13	Speed/torque gradient	rpm/mNm	3384
14	Rotor inertia	gcm^2	0.7
15	Weight	g	7.5
16	Thermal resistance housing-ambient	K/W	15.4
17	Thermal resistance winding-housing	K/W	13.6
18	Thermal time constant motor	s	128
19	Thermal time constant winding	s	43
20	Operating temperature range	°C	-40 ~ +120
21	Thermal class of winding	°C	155
22	Axial play	mm	0.012
23	Radial play	mm	0.008
24	Axial load dynamic	N	1.5
25	Axial load static	N	37
26	Radial load at 3 mm from mounting face	N	12
27	No. of pole pairs		4
28	Bearings		2 ball bearings
29	Commutation		Sensorless
30	Protection class		IP 30

Applications

UAV gimbals and handheld gimbals

Options	
Lead wires length	Bearing type
Shaft length	Hall sensor
Special coils	Encoder
Gearheads	Driver

Approx. actual size

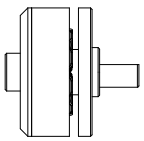

Dimension (mm) · BO1709NB2B

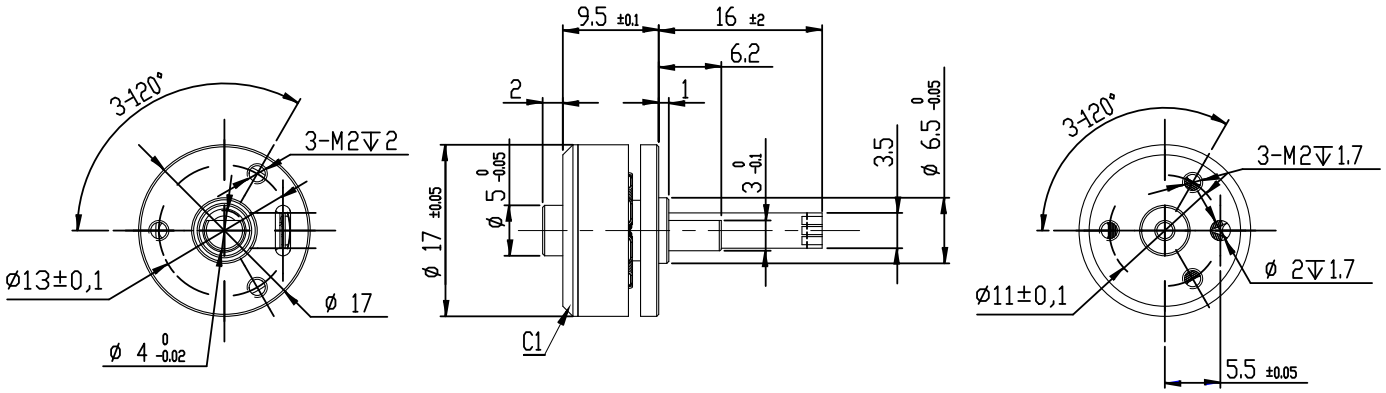

Brushless DC Motor · **BO1815N2B**

Outer Rotor Without Sensor

	Characteristics		10-383-11.1
1	Voltage	V	11.1
2	Terminal resistance	Ω	0.2
3	No-load speed	rpm	38300
4	No-load current	A	0.5
5	Nominal torque	mNm	16
6	Nominal speed	rpm	33000
7	Nominal current	A	6.3
8	Max. output power	W	158
9	Max. efficiency	%	82
10	Back-EMF constant	mV/rpm	0.3
11	Torque constant	mNm/A	2.7
12	KV value	rpm/V	3450
13	Speed/torque gradient	rpm/mNm	254
14	Rotor inertia	gcm^2	2.8
15	Weight	g	11
16	Thermal resistance housing-ambient	K/W	3.5
17	Thermal resistance winding-housing	K/W	3
18	Thermal time constant motor	s	250
19	Thermal time constant winding	s	2
20	Operating temperature range	°C	-40 ~ +120
21	Thermal class of winding	°C	180
22	Axial play	mm	0.012
23	Radial play	mm	0.008
24	Axial load dynamic	N	1.5
25	Axial load static	N	37
26	Radial load at 3 mm from mounting face	N	12
27	No. of pole pairs		6
28	Bearings		2 ball bearings
29	Commutation		Sensorless
30	Protection class		IP 20

Applications

UAV, Aeromodelling, etc.

Options	
Lead wires length	Bearing type
Shaft length	Encoder
Special coils	Driver
Gearheads	

Dimension (mm) · BO1815N2B

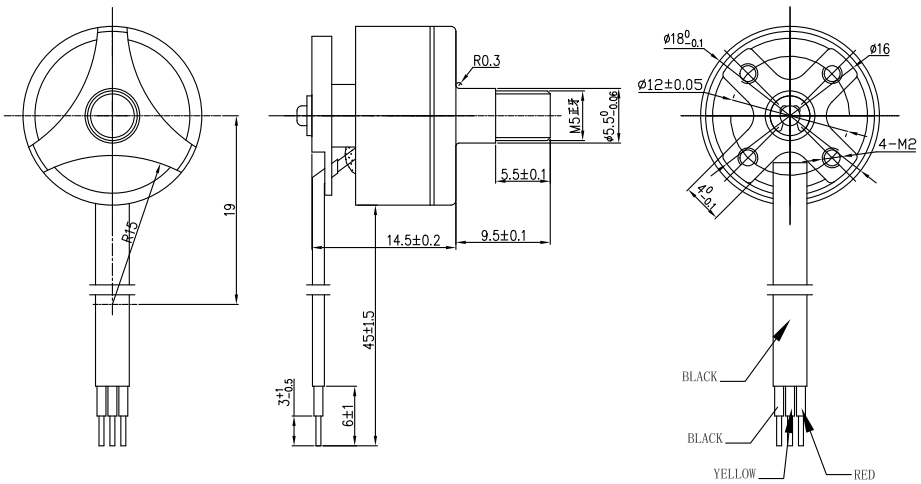

Approx. actual size

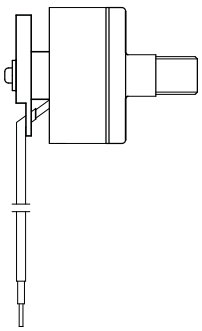

Brushless DC Motor · **BO2010NB2B**

Outer Rotor Without Sensor

	Characteristics		03-280-12.0
1	Voltage	V	12
2	Terminal resistance	Ω	2.2
3	Terminal inductance	mH	0.29
4	No-load speed	rpm	28000
5	No-load current	A	0.20
6	Nominal torque	mNm	3.5
7	Nominal speed	rpm	21420
8	Nominal current	A	1.0
9	Max. output power	W	15.0
10	Max. efficiency	%	72
11	Back-EMF constant	mV/rpm	0.4
12	Torque constant	mNm/A	4.0
13	Speed/torque gradient	rpm/mNm	1311
14	Rotor inertia	gcm^2	2.8
15	Weight	g	12
16	Thermal resistance housing-ambient	K/W	12
17	Thermal resistance winding-housing	K/W	12.5
18	Thermal time constant motor	s	354
19	Thermal time constant winding	s	15
20	Operating temperature range	°C	-40 ~ +120
21	Thermal class of winding	°C	155
22	Axial play	mm	0.012
23	Radial play	mm	0.008
24	Axial load dynamic	N	1.5
25	Axial load static	N	37
26	Radial load at 3 mm from mounting face	N	12
27	No. of pole pairs		4
28	Bearings		2 ball bearings
29	Commutation		Sensorless
30	Protection class		IP 20

Applications

UAV gimbals and handheld gimbals

Options	
Lead wires length	Bearing type
Shaft length	Hall sensor
Special coils	Encoder
Gearheads	Driver

Approx. actual size

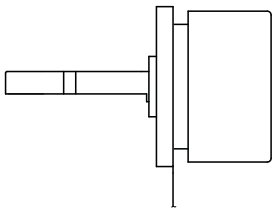

Dimension (mm) · BO2010NB2B

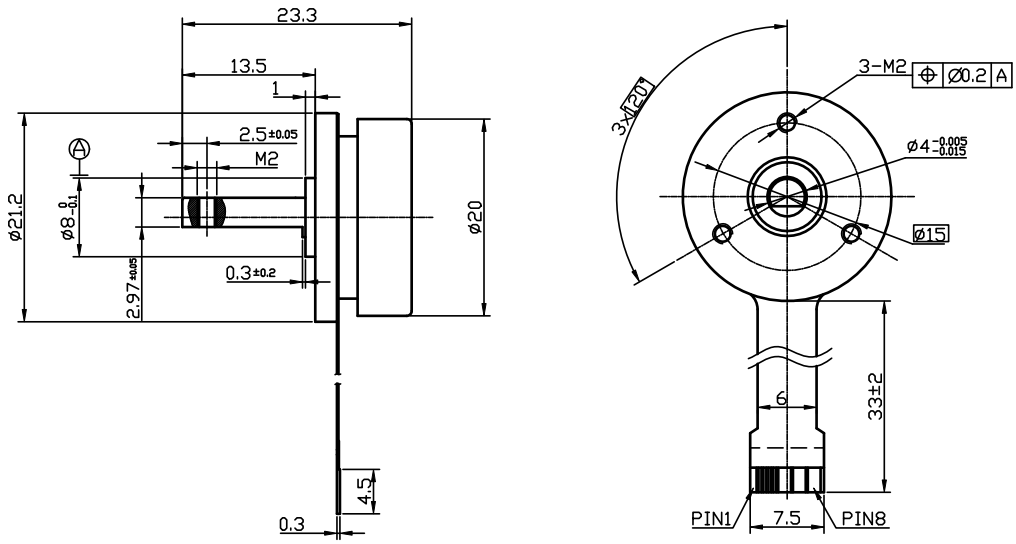

Brushless DC Motor · **BO2015NB2B**

Outer Rotor Without Sensor

	Characteristics		03-113-12.0
1	Voltage	V	12
2	Terminal resistance	Ω	3.8
3	Terminal inductance	mH	0.61
4	No-load speed	rpm	11300
5	No-load current	A	0.08
6	Nominal torque	mNm	9.1
7	Nominal speed	rpm	6440
8	Nominal current	A	1.01
9	Max. output power	W	9
10	Max. efficiency	%	71
11	Back-EMF constant	mV/rpm	1
12	Torque constant	mNm/A	9.9
13	Speed/torque gradient	rpm/mNm	370
14	Rotor inertia	gcm^2	6.7
15	Weight	g	21
16	Thermal resistance housing-ambient	K/W	8
17	Thermal resistance winding-housing	K/W	9.5
18	Thermal time constant motor	s	354
19	Thermal time constant winding	s	23
20	Operating temperature range	°C	-40 ~ +120
21	Thermal class of winding	°C	155
22	Axial play	mm	0.012
23	Radial play	mm	0.08
24	Axial load dynamic	N	1.5
25	Axial load static	N	37
26	Radial load at 3 mm from mounting face	N	12
27	No. of pole pairs		4
28	Bearings		2 ball bearings
29	Commutation		Sensorless
30	Protection class		IP 20

Applications

UAV gimbals and handheld gimbals

Options	
Lead wires length	Bearing type
Shaft length	Hall sensor
Special coils	Encoder
Gearheads	Driver

Dimension (mm) · BO2015NB2B

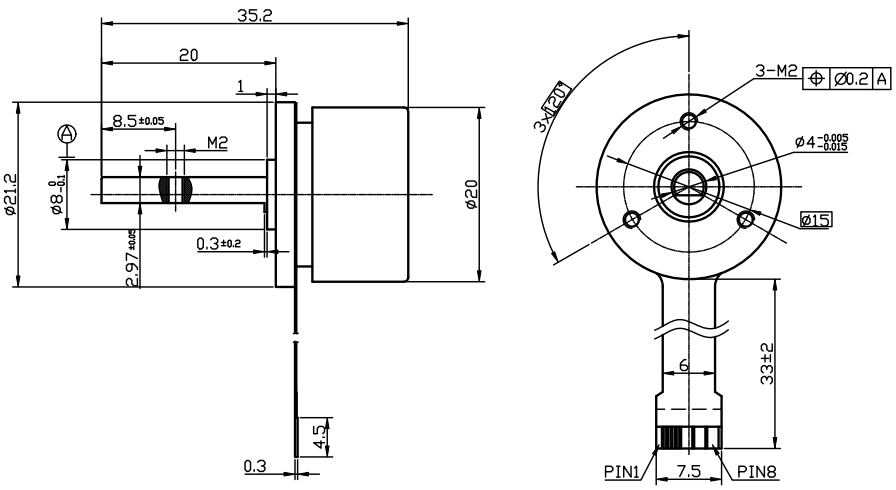

Approx. actual size

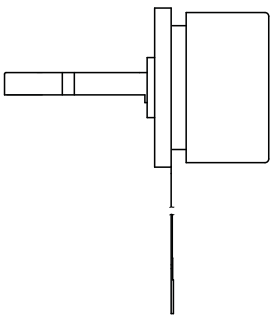

Brushless DC Motor · **BO2316N2B**

Outer Rotor Without Sensor

	Characteristics		05-195-12.0
1	Voltage	V	12
2	Terminal resistance	Ω	0.5
3	No-load speed	rpm	19500
4	No-load current	A	0.45
5	Nominal torque	mNm	22.7
6	Nominal speed	rpm	15000
7	Nominal current	A	4.4
8	Max. output power	W	70
9	Max. efficiency	%	75
10	Back-EMF constant	mV/rpm	0.6
11	Torque constant	mNm/A	5.8
12	KV value	rpm/V	1625
13	Speed/torque gradient	rpm/mNm	143
14	Rotor inertia	gcm^2	6.3
15	Weight	g	15
16	Thermal resistance housing-ambient	K/W	3
17	Thermal resistance winding-housing	K/W	2.5
18	Thermal time constant motor	s	160
19	Thermal time constant winding	s	26
20	Operating temperature range	°C	-40 ~ +120
21	Thermal class of winding	°C	180
22	Axial play	mm	0.014
23	Radial play	mm	0.008
24	Axial load dynamic	N	5
25	Axial load static	N	80
26	Radial load at 3 mm from mounting face	N	29
27	No. of pole pairs		6
28	Bearings		2 ball bearings
29	Commutation		Sensorless
30	Protection class		IP 20

Applications

UAV, Aeromodelling, etc.

Options	
Lead wires length	Bearing type
Shaft length	Encoder
Special coils	Driver
Gearheads	

Dimension (mm) · BO2316N2B

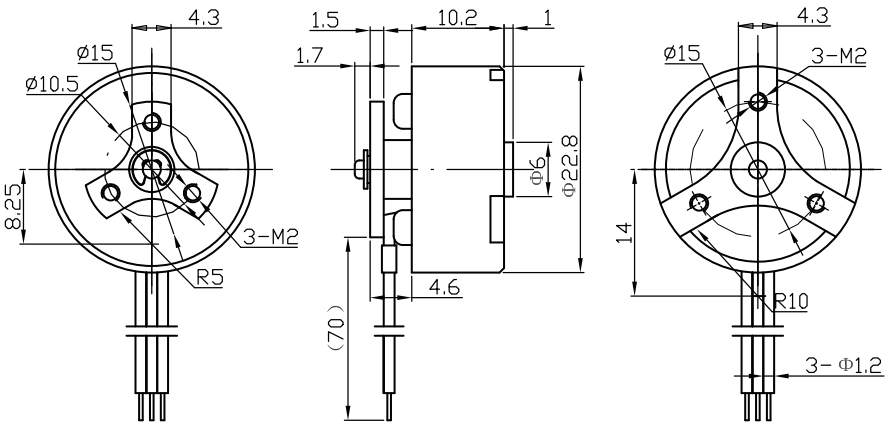

Approx. actual size

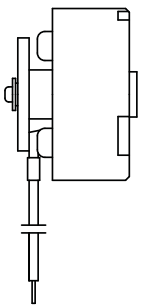

Brushless DC Motor · **BO2414NB2B**

Outer Rotor Without Sensor

	Characteristics		02-64-12.0
1	Voltage	V	12
2	Terminal resistance	Ω	20.0
3	Terminal inductance	mH	4.50
4	No-load speed	rpm	6400
5	No-load current	A	0.04
6	Nominal torque	mNm	6.3
7	Nominal speed	rpm	160
8	Nominal current	A	0.4
9	Max. output power	W	1.6
10	Max. efficiency	%	57
11	Back-EMF constant	mV/rpm	1.77
12	Torque constant	mNm/A	17
13	Speed/torque gradient	rpm/mNm	672
14	Rotor inertia	gcm^2	7.2
15	Weight	g	15
16	Thermal resistance housing-ambient	K/W	13.7
17	Thermal resistance winding-housing	K/W	7.6
18	Thermal time constant motor	s	120
19	Thermal time constant winding	s	12
20	Operating temperature range	°C	-40 ~ +120
21	Thermal class of winding	°C	155
22	Axial play	mm	0.012
23	Radial play	mm	0.08
24	Axial load dynamic	N	1.5
25	Axial load static	N	37
26	Radial load at 3 mm from mounting face	N	12
27	No. of pole pairs		6
28	Bearings		2 ball bearings
29	Commutation		Sensorless
30	Protection class		IP 20

Applications

UAV gimbals and handheld gimbals

Options	
Lead wires length	Bearing type
Shaft length	Hall sensor
Special coils	Encoder
Gearheads	Driver

Approx. actual size

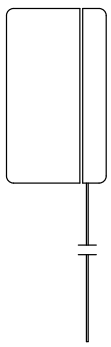

Dimension (mm) · BO2414NB2B

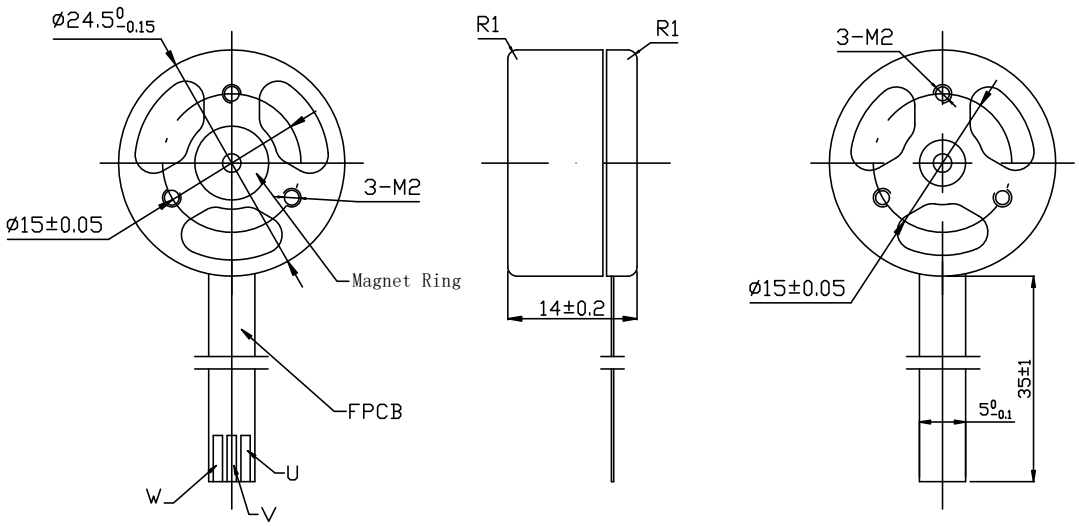

Brushless DC Motor · **BO2814N2B**

Outer Rotor Without Sensor

	Characteristics		03-220-11.1
1	Voltage	V	11.1
2	Terminal resistance	Ω	0.12
3	No-load speed	rpm	22000
4	No-load current	A	0.65
5	Nominal torque	mNm	42.7
6	Nominal speed	rpm	19000
7	Nominal current	A	9.6
8	Max. output power	W	253
9	Max. efficiency	%	84
10	Back-EMF constant	mV/rpm	0.5
11	Torque constant	mNm/A	4.8
12	KV value	rpm/V	2000
13	Speed/torque gradient	rpm/mNm	51
14	Rotor inertia	gcm^2	12
15	Weight	g	21
16	Thermal resistance housing-ambient	K/W	2.5
17	Thermal resistance winding-housing	K/W	2
18	Thermal time constant motor	s	180
19	Thermal time constant winding	s	25
20	Operating temperature range	°C	-40 ~ +120
21	Thermal class of winding	°C	180
22	Axial play	mm	0.014
23	Radial play	mm	0.008
24	Axial load dynamic	N	5
25	Axial load static	N	80
26	Radial load at 3 mm from mounting face	N	29
27	No. of pole pairs		7
28	Bearings		2 ball bearings
29	Commutation		Sensorless
30	Protection class		IP 20

Applications

UAV, Aeromodelling, etc.

Options	
Lead wires length	Bearing type
Shaft length	Encoder
Special coils	Driver
Gearheads	

Approx. actual size

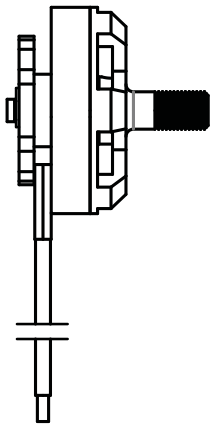

Dimension (mm) · BO2814N2B

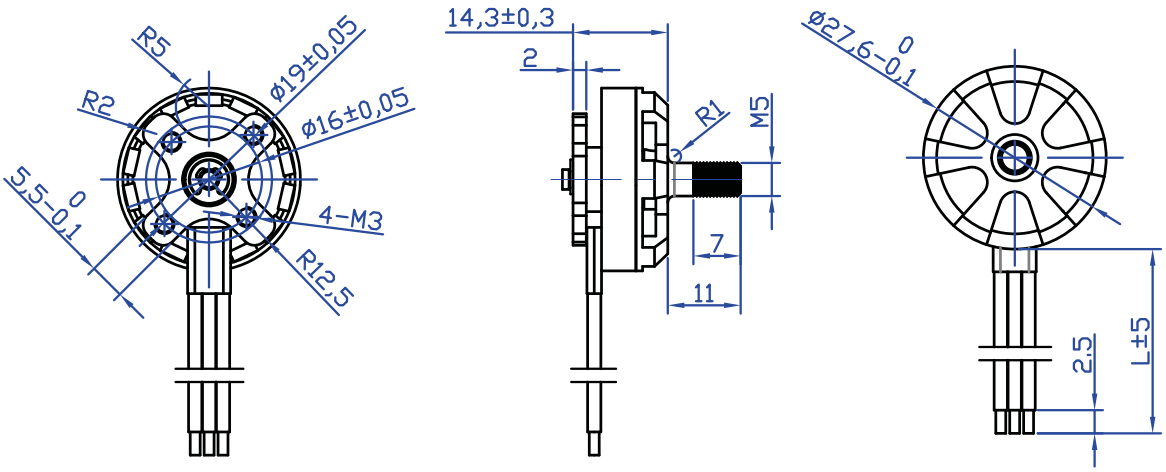

Brushless DC Motor · **BO2820N2B**

Outer Rotor Without Sensor

	Characteristics		04-135-10.5
1	Voltage	V	10.5
2	Terminal resistance	Ω	0.13
3	No-load speed	rpm	13500
4	No-load current	A	0.45
5	Nominal torque	mNm	71
6	Nominal speed	rpm	12300
7	Nominal current	A	10
8	Max. output power	W	210
9	Max. efficiency	%	86
10	Back-EMF constant	mV/rpm	0.77
11	Torque constant	mNm/A	7.4
12	KV value	rpm/V	1290
13	Speed/torque gradient	rpm/mNm	22.8
14	Rotor inertia	gcm^2	19
15	Weight	g	41
16	Thermal resistance housing-ambient	K/W	2.3
17	Thermal resistance winding-housing	K/W	2
18	Thermal time constant motor	s	280
19	Thermal time constant winding	s	37
20	Operating temperature range	°C	-40 ~ +120
21	Thermal class of winding	°C	180
22	Axial play	mm	0.012
23	Radial play	mm	0.008
24	Axial load dynamic	N	5
25	Axial load static	N	80
26	Radial load at 3 mm from mounting face	N	29
27	No. of pole pairs		7
28	Bearings		2 ball bearings
29	Commutation		Sensorless
30	Protection class		IP 20

Applications

UAV, Aeromodelling, etc.

Options	
Lead wires length	Bearing type
Shaft length	Encoder
Special coils	Driver
Gearheads	

Dimension (mm) · BO2820N2B

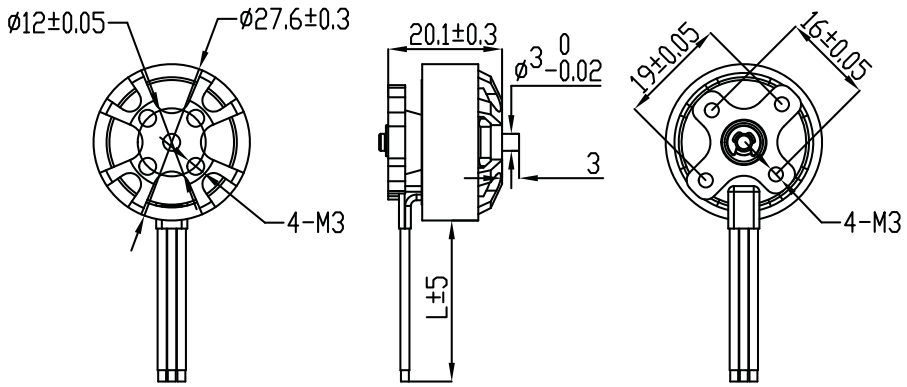

Approx. actual size

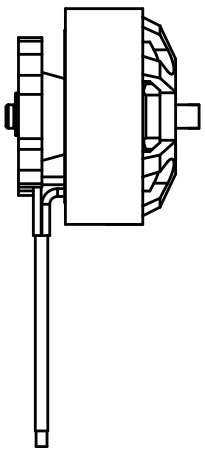

Brushless DC Motor · **BO2824N2B**

Outer Rotor Without Sensor

	Characteristics		20-102-11.1
1	Voltage	V	11.1
2	Terminal resistance	Ω	0.18
3	No-load speed	rpm	10200
4	No-load current	A	0.4
5	Nominal torque	mNm	89
6	Nominal speed	rpm	8200
7	Nominal current	A	9
8	Max. output power	W	169
9	Max. efficiency	%	85
10	Back-EMF constant	mV/rpm	1.1
11	Torque constant	mNm/A	10.3
12	KV value	rpm/V	920
13	Speed/torque gradient	rpm/mNm	16.1
14	Rotor inertia	gcm^2	27
15	Weight	g	47
16	Thermal resistance housing-ambient	K/W	2
17	Thermal resistance winding-housing	K/W	2
18	Thermal time constant motor	s	290
19	Thermal time constant winding	s	41
20	Operating temperature range	°C	-40 ~ +120
21	Thermal class of winding	°C	180
22	Axial play	mm	0.014
23	Radial play	mm	0.008
24	Axial load dynamic	N	5
25	Axial load static	N	80
26	Radial load at 3 mm from mounting face	N	29
27	No. of pole pairs		7
28	Bearings		2 ball bearings
29	Commutation		Sensorless
30	Protection class		IP 20

Applications

UAV, Aeromodelling, etc.

Options	
Lead wires length	Bearing type
Shaft length	Encoder
Special coils	Driver
Gearheads	

Dimension (mm) · BO2824N2B

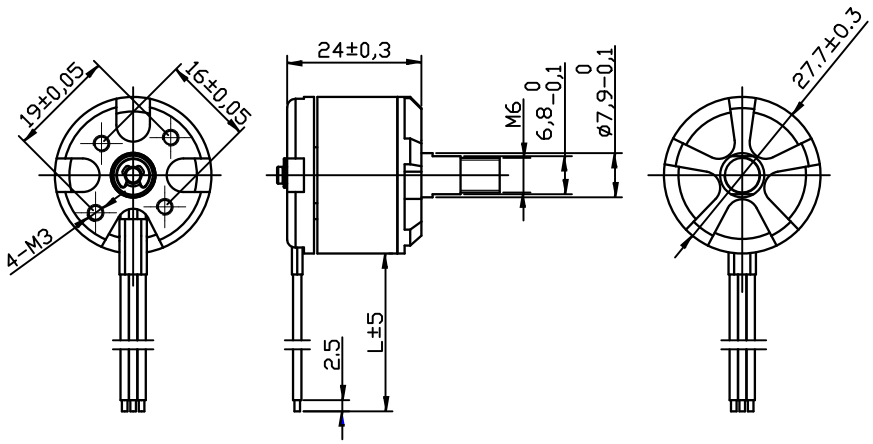

Approx. actual size

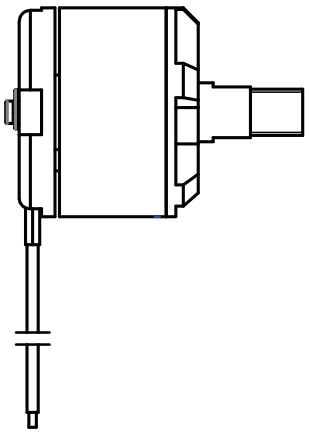

Brushless DC Motor · **BO2826N2B**

Outer Rotor Without Sensor

	Characteristics		13-135-14.8
1	Voltage	V	14.8
2	Terminal resistance	Ω	0.14
3	No-load speed	rpm	13500
4	No-load current	A	0.55
5	Nominal torque	mNm	99
6	Nominal speed	rpm	11800
7	Nominal current	A	10
8	Max. output power	W	387
9	Max. efficiency	%	86
10	Back-EMF constant	mV/rpm	1.1
11	Torque constant	mNm/A	10.4
12	KV value	rpm/V	910
13	Speed/torque gradient	rpm/mNm	12.3
14	Rotor inertia	gcm^2	31
15	Weight	g	53
16	Thermal resistance housing-ambient	K/W	1.7
17	Thermal resistance winding-housing	K/W	1.8
18	Thermal time constant motor	s	300
19	Thermal time constant winding	s	43
20	Operating temperature range	°C	-40 ~ +120
21	Thermal class of winding	°C	180
22	Axial play	mm	0.014
23	Radial play	mm	0.008
24	Axial load dynamic	N	5
25	Axial load static	N	80
26	Radial load at 3 mm from mounting face	N	29
27	No. of pole pairs		7
28	Bearings		2 ball bearings
29	Commutation		Sensorless
30	Protection class		IP 20

Applications

UAV, Aeromodelling, etc.

Options	
Lead wires length	Bearing type
Shaft length	Encoder
Special coils	Driver
Gearheads	

Dimension (mm) · BO2826N2B

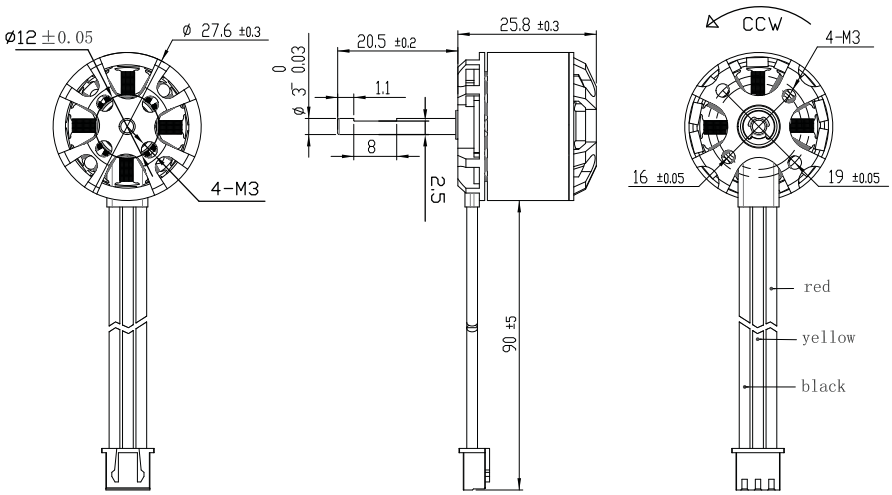

Approx. actual size

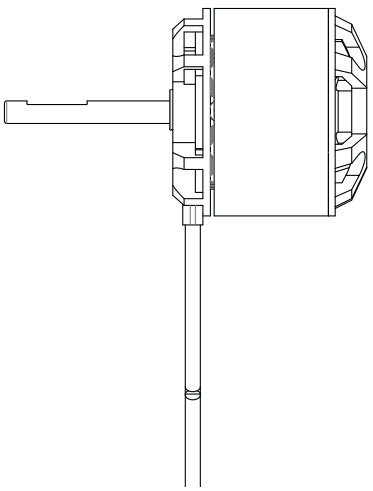

Brushless DC Motor · **BO2828N2B**

Outer Rotor Without Sensor

	Characteristics		05-130-14.8
1	Voltage	V	14.8
2	Terminal resistance	Ω	0.12
3	No-load speed	rpm	13000
4	No-load current	A	0.65
5	Nominal torque	mNm	120
6	Nominal speed	rpm	11300
7	Nominal current	A	11.7
8	Max. output power	W	452
9	Max. efficiency	%	86
10	Back-EMF constant	mV/rpm	1.13
11	Torque constant	mNm/A	10.8
12	KV value	rpm/V	880
13	Speed/torque gradient	rpm/mNm	9.8
14	Rotor inertia	gcm^2	35
15	Weight	g	61
16	Thermal resistance housing-ambient	K/W	1.6
17	Thermal resistance winding-housing	K/W	1.4
18	Thermal time constant motor	s	315
19	Thermal time constant winding	s	45
20	Operating temperature range	°C	-40 ~ +120
21	Thermal class of winding	°C	180
22	Axial play	mm	0.012
23	Radial play	mm	0.008
24	Axial load dynamic	N	8
25	Axial load static	N	85
26	Radial load at 3 mm from mounting face	N	26
27	No. of pole pairs		7
28	Bearings		2 ball bearings
29	Commutation		Sensorless
30	Protection class		IP 20

Applications

UAV, Aeromodelling, etc.

Options	
Lead wires length	Bearing type
Shaft length	Encoder
Special coils	Driver
Gearheads	

Dimension (mm) · BO2828N2B

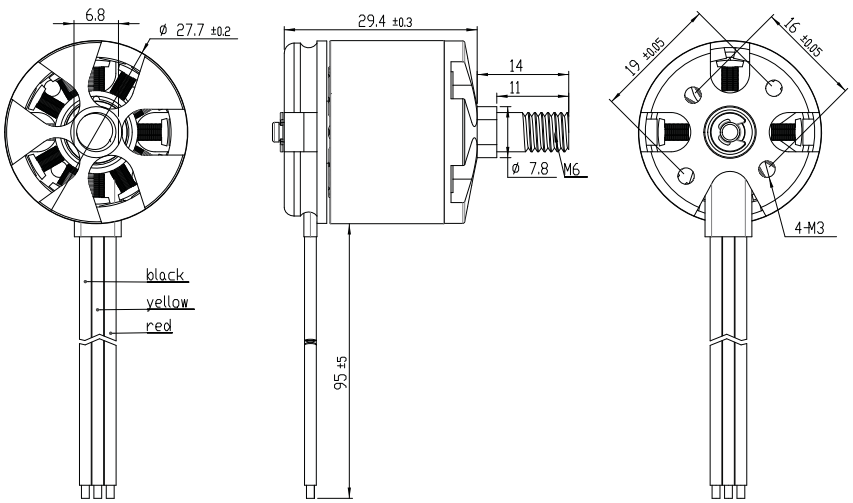

Approx. actual size

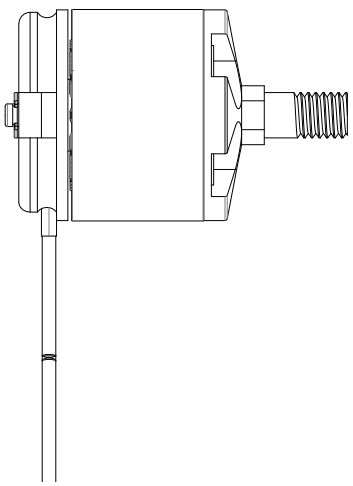

Brushless DC Motor · **BO2914NBH2B**

Outer Rotor With Sensor

	Characteristics		17-55-24.0
1	Voltage	V	24
2	Terminal resistance	Ω	12.00
3	No-load speed	rpm	5500
4	No-load current	A	0.1
5	Stall torque	mNm	75
6	Stall current	A	2
7	Nominal torque	mNm	21.0
8	Nominal speed	rpm	3300
9	Nominal current	A	0.64
10	Max. output power	W	10
11	Max. efficiency	%	60
12	Back-EMF constant	mV/rpm	4.1
13	Torque constant	mNm/A	40
14	KV value	rpm/V	230
15	Speed/torque gradient	rpm/mNm	73
16	Rotor inertia	gcm^2	23
17	Weight	g	51
18	Thermal resistance housing-ambient	K/W	7
19	Thermal resistance winding-housing	K/W	5
20	Thermal time constant motor	s	160
21	Thermal time constant winding	s	15
22	Operating temperature range	°C	-40 ~ +120
23	Thermal class of winding	°C	155
24	Axial play	mm	0.012
25	Radial play	mm	0.02
26	Axial load dynamic	N	1.5
27	Axial load static	N	37
28	Radial load at 3 mm from mounting face	N	12
29	No. of pole pairs		6
30	Bearings		2 ball bearings
31	Commutation		Hall sensor
32	Protection class		IP 20

Applications

Precision drives in medical equipment, industrial automation fields

Options	
Lead wires length	Bearing type
Shaft length	Hall sensor
Special coils	Encoder
Gearheads	Driver

Dimension (mm) · BO2914NBH2B

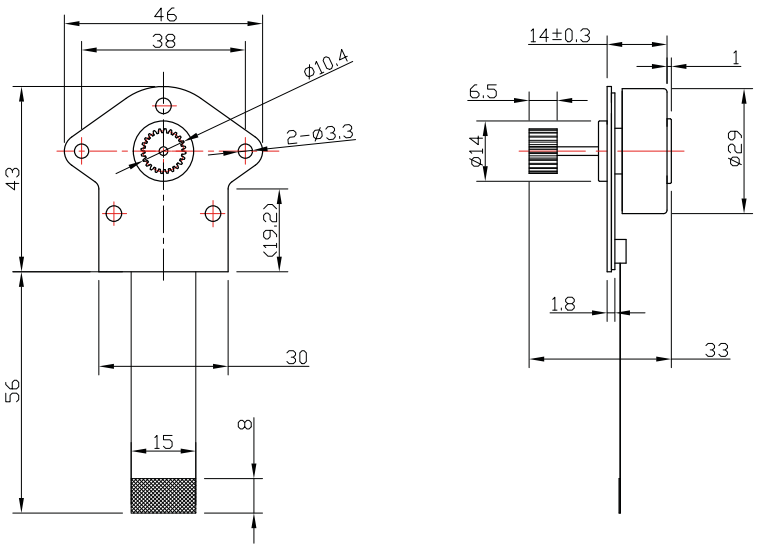

Approx. actual size

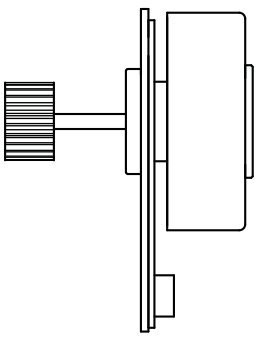

Brushless DC Motor · **BF3211N2B**

Outer Rotor Without Sensor

	Characteristics		02-145-12.0
1	Voltage	V	12
2	Terminal resistance	Ω	4.2
3	No-load speed	rpm	14500
4	No-load current	A	0.1
5	Nominal torque	mNm	8.1
6	Nominal speed	rpm	6200
7	Nominal current	A	1.2
8	Max. output power	W	8
9	Max. efficiency	%	66
10	Back-EMF constant	mV/rpm	0.8
11	Torque constant	mNm/A	7.6
12	KV value	rpm/V	1208
13	Speed/torque gradient	rpm/mNm	690
14	Rotor inertia	gcm^2	12.4
15	Weight	g	27
16	Thermal resistance housing-ambient	K/W	6
17	Thermal resistance winding-housing	K/W	5
18	Thermal time constant motor	s	450
19	Thermal time constant winding	s	224
20	Operating temperature range	°C	-40 ~ +100
21	Thermal class of winding	°C	155
22	Axial play	mm	0.01
23	Radial play	mm	0.008
24	Axial load dynamic	N	8
25	Axial load static	N	85
26	Radial load at 3 mm from mounting face	N	26
27	No. of pole pairs		4
28	Bearings		2 ball bearings
29	Commutation		Sensorless
30	Protection class		IP 20

Applications

Precision visual equipment

Options

Lead wires length	Bearing type
Shaft length	Hall sensor
Special coils	Encoder
Gearheads	Driver

Approx. actual size

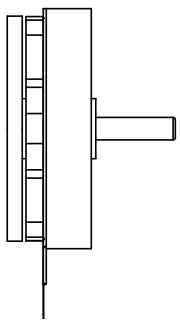

Dimension (mm) · BF3211N2B

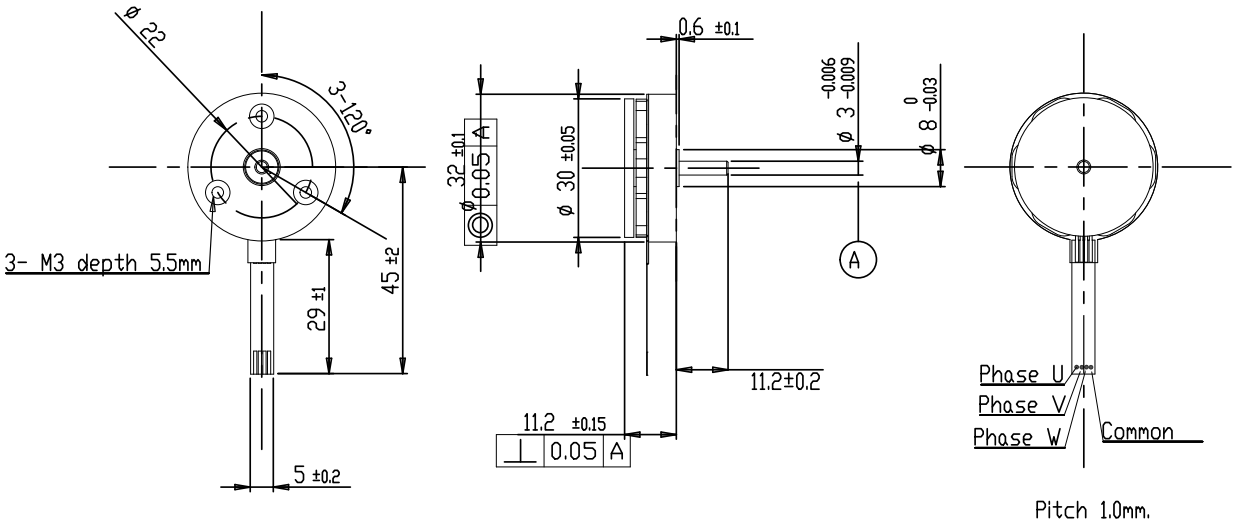

Brushless DC Motor · **BO3216NB2B**

Outer Rotor Without Sensor

	Characteristics		02-66-24.0
1	Voltage	V	24
2	Terminal resistance	Ω	4.2
3	Terminal inductance	mH	1.34
4	No-load speed	rpm	6600
5	No-load current	A	0.1
6	Nominal torque	mNm	41.6
7	Nominal speed	rpm	4520
8	Nominal current	A	1.4
9	Max. output power	W	32.7
10	Max. efficiency	%	73
11	Back-EMF constant	mV/rpm	3.55
12	Torque constant	mNm/A	34
13	Speed/torque gradient	rpm/mNm	35
14	Rotor inertia	gcm^2	35
15	Weight	g	48
16	Thermal resistance housing-ambient	K/W	3.8
17	Thermal resistance winding-housing	K/W	4
18	Thermal time constant motor	s	110
19	Thermal time constant winding	s	6.9
20	Operating temperature range	°C	-40 ~ +120
21	Thermal class of winding	°C	155
22	Axial play	mm	0.08
23	Radial play	mm	0.006
24	Axial load dynamic	N	5
25	Axial load static	N	80
26	Radial load at 3 mm from mounting face	N	29
27	No. of pole pairs		7
28	Bearings		2 ball bearings
29	Commutation		Sensorless
30	Protection class		IP 20

Applications

UAV gimbals and handheld gimbals

Options	
Lead wires length	Bearing type
Shaft length	Hall sensor
Special coils	Encoder
Gearheads	Driver

Approx. actual size

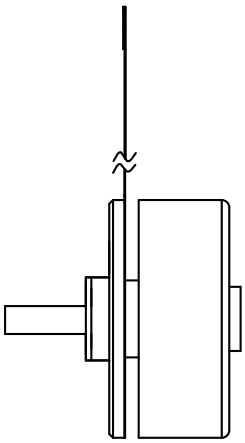

Dimension (mm) · BO3216NB2B

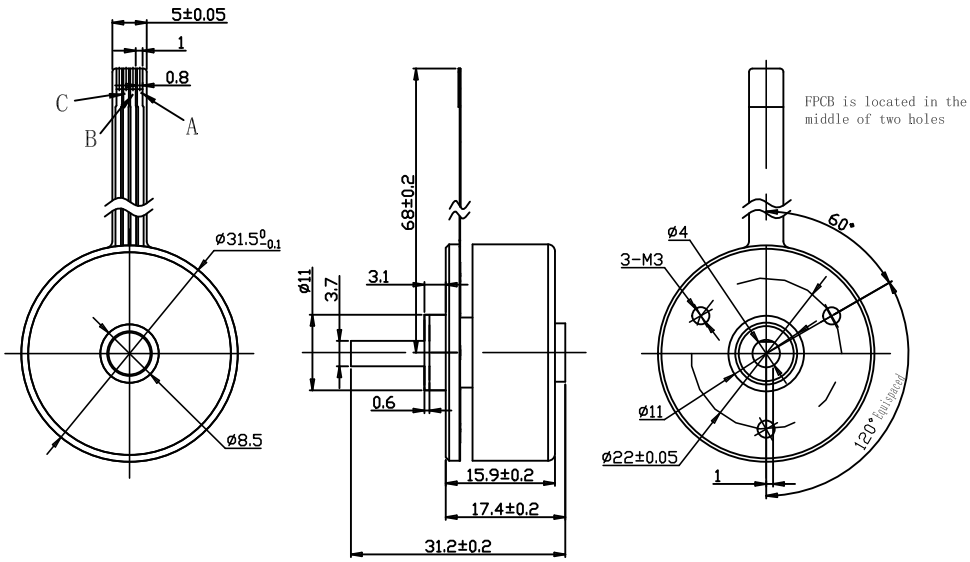

Brushless DC Motor · **BO3518N2B**

Outer Rotor Without Sensor

	Characteristics		01-100-12.0
1	Voltage	V	12
2	Terminal resistance	Ω	0.14
3	No-load speed	rpm	10000
4	No-load current	A	0.5
5	Nominal torque	mNm	82
6	Nominal speed	rpm	7100
7	Nominal current	A	7.8
8	Max. output power	W	103
9	Max. efficiency	%	78.4
10	Back-EMF constant	mV/rpm	1.2
11	Torque constant	mNm/A	11.3
12	KV value	rpm/V	830
13	Speed/torque gradient	rpm/mNm	23
14	Rotor inertia	gcm^2	8.7
15	Weight	g	50
16	Thermal resistance housing-ambient	K/W	1.6
17	Thermal resistance winding-housing	K/W	1.4
18	Thermal time constant motor	s	124
19	Thermal time constant winding	s	9
20	Operating temperature range	°C	-40 ~ +120
21	Thermal class of winding	°C	180
22	Axial play	mm	0.07
23	Radial play	mm	0.008
24	Axial load dynamic	N	5
25	Axial load static	N	80
26	Radial load at 3 mm from mounting face	N	29
27	No. of pole pairs		7
28	Bearings		2 ball bearings
29	Commutation		Sensorless
30	Protection class		IP 20

Applications

UAV, Aeromodelling, etc.

Options	
Lead wires length	Bearing type
Shaft length	Encoder
Special coils	Driver
Gearheads	

Dimension (mm) · BO3518N2B

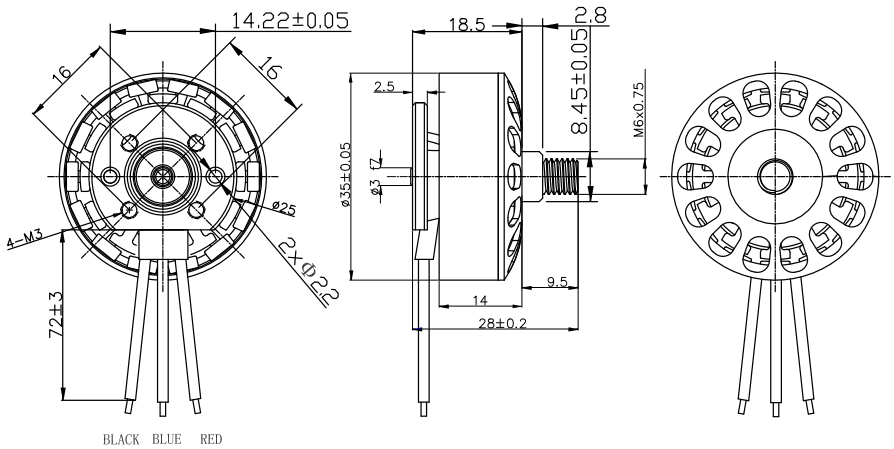

Approx. actual size

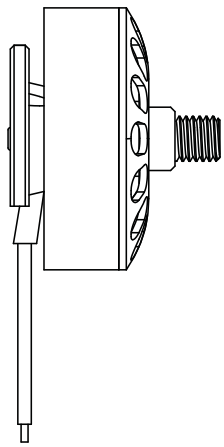

Brushless DC Motor · **BO3518NB2B**

Outer Rotor Without Sensor

	Characteristics		02-25-12.0
1	Voltage	V	12
2	Terminal resistance	Ω	10.0
3	Terminal inductance	mH	3.0
4	No-load speed	rpm	2500
5	No-load current	A	0.05
6	Nominal torque	mNm	30
7	Nominal speed	rpm	310
8	Nominal current	A	0.8
9	Max. output power	W	3.3
10	Max. efficiency	%	63
11	Back-EMF constant	mV/rpm	4.6
12	Torque constant	mNm/A	43.9
13	Speed/torque gradient	rpm/mNm	49.5
14	Rotor inertia	gcm^2	43
15	Weight	g	44
16	Thermal resistance housing-ambient	K/W	7.3
17	Thermal resistance winding-housing	K/W	5.7
18	Thermal time constant motor	s	120
19	Thermal time constant winding	s	9
20	Operating temperature range	°C	-40 ~ +120
21	Thermal class of winding	°C	155
22	Axial play	mm	0.012
23	Radial play	mm	0.008
24	Axial load dynamic	N	1.5
25	Axial load static	N	37
26	Radial load at 3 mm from mounting face	N	12
27	No. of pole pairs		7
28	Bearings		2 ball bearings
29	Commutation		Sensorless
30	Protection class		IP 30

Applications

UAV gimbals and handheld gimbals

Options	
Lead wires length	Bearing type
Shaft length	Hall sensor
Special coils	Encoder
Gearheads	Driver

Approx. actual size

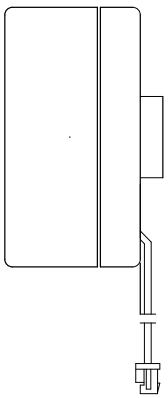

Dimension (mm) · BO3518NB2B

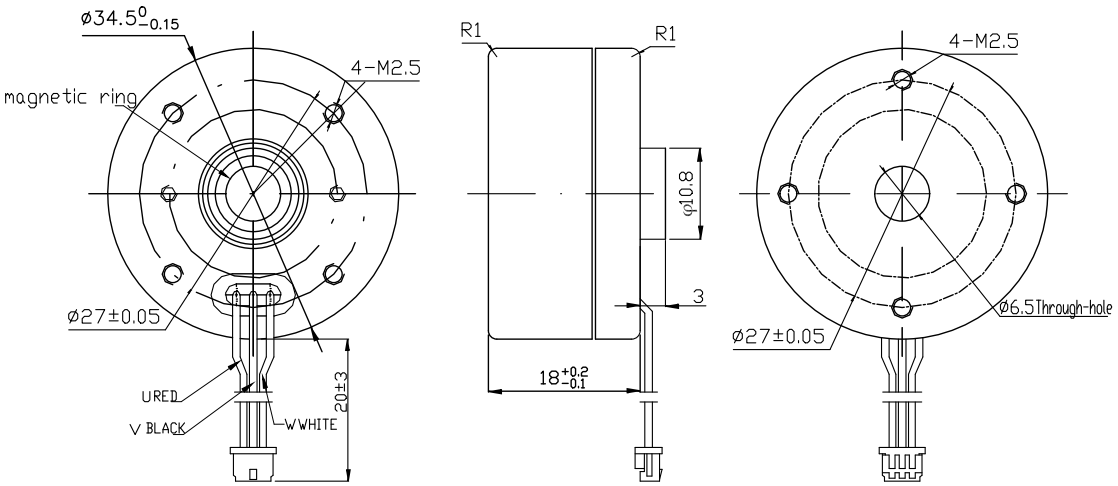

Brushless DC Motor · **BO3823N2B**

Outer Rotor Without Sensor

	Characteristics		01-100-14.8
1	Voltage	V	14.8
2	Terminal resistance	Ω	0.11
3	No-load speed	rpm	10000
4	No-load current	A	0.65
5	Nominal torque	mNm	194
6	Nominal speed	rpm	9000
7	Nominal current	A	15
8	Max. output power	W	215
9	Max. efficiency	%	86.5
10	Back-EMF constant	mV/rpm	1.47
11	Torque constant	mNm/A	14.1
12	KV value	rpm/V	680
13	Speed/torque gradient	rpm/mNm	5.3
14	Rotor inertia	gcm^2	42
15	Weight	g	73
16	Thermal resistance housing-ambient	K/W	1.3
17	Thermal resistance winding-housing	K/W	1.2
18	Thermal time constant motor	s	300
19	Thermal time constant winding	s	69
20	Operating temperature range	°C	-40 ~ +120
21	Thermal class of winding	°C	180
22	Axial play	mm	0.012
23	Radial play	mm	0.008
24	Axial load dynamic	N	8
25	Axial load static	N	110
26	Radial load at 3 mm from mounting face	N	31
27	No. of pole pairs		7
28	Bearings		2 ball bearings
29	Commutation		Sensorless
30	Protection class		IP 20

Applications

UAV, industrial automation fields, etc.

Options	
Lead wires length	Bearing type
Shaft length	Hall sensor
Special coils	Encoder
Gearheads	Driver

Dimension (mm) · BO3823N2B

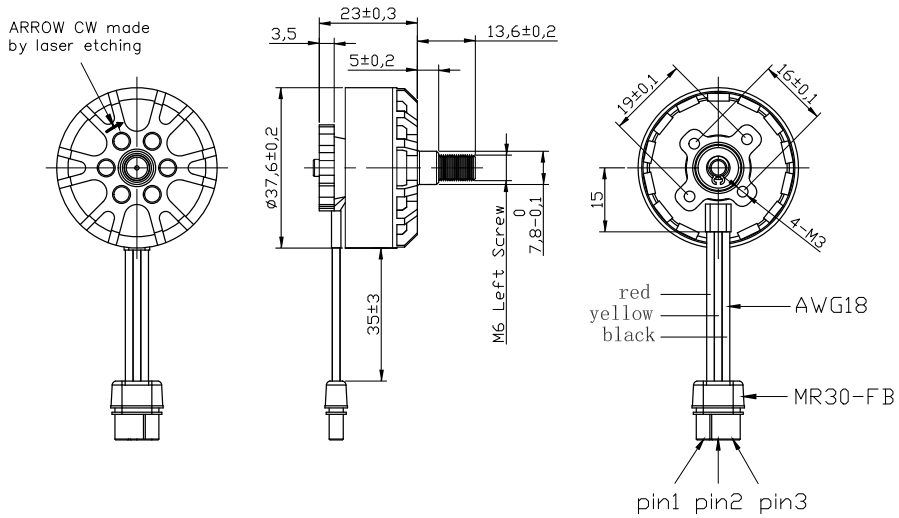

Approx. actual size

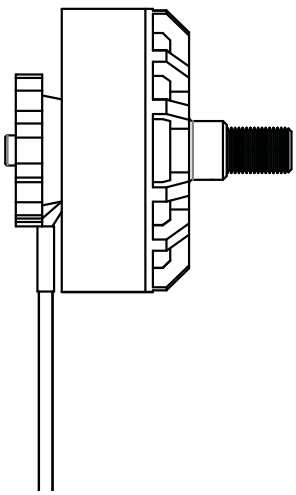

Brushless DC Motor · **BO3828NB2B**

Outer Rotor Without Sensor

	Characteristics		01-290-24.0
1	Voltage	V	24
2	Terminal resistance	Ω	0.48
3	No-load speed	rpm	29000
4	No-load current	A	0.7
5	Nominal torque	mNm	22
6	Nominal speed	rpm	26700
7	Nominal current	A	3.6
8	Max. output power	W	292
9	Max. efficiency	%	78
10	Back-EMF constant	mV/rpm	0.82
11	Torque constant	mNm/A	7.8
12	KV value	rpm/V	1200
13	Speed/torque gradient	rpm/mNm	75.5
14	Rotor inertia	gcm^2	96
15	Weight	g	105
16	Thermal resistance housing-ambient	K/W	2.3
17	Thermal resistance winding-housing	K/W	1.8
18	Thermal time constant motor	s	110
19	Thermal time constant winding	s	35
20	Operating temperature range	°C	-40 ~ +120
21	Thermal class of winding	°C	155
22	Axial play	mm	0.012
23	Radial play	mm	0.008
24	Axial load dynamic	N	10
25	Axial load static	N	110
26	Radial load at 3 mm from mounting face	N	42
27	No. of pole pairs		2
28	Bearings		2 ball bearings
29	Commutation		Sensorless
30	Protection class		IP 20

Applications

Precision drives in medical equipment, industrial automation fields

Options	
Lead wires length	Bearing type
Shaft length	Hall sensor
Special coils	Encoder
Gearheads	Driver

Approx. actual size

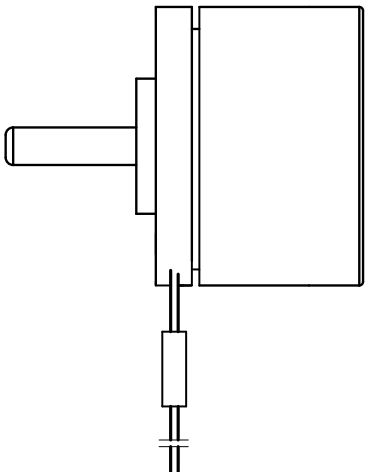

Dimension (mm) · BO3828NB2B

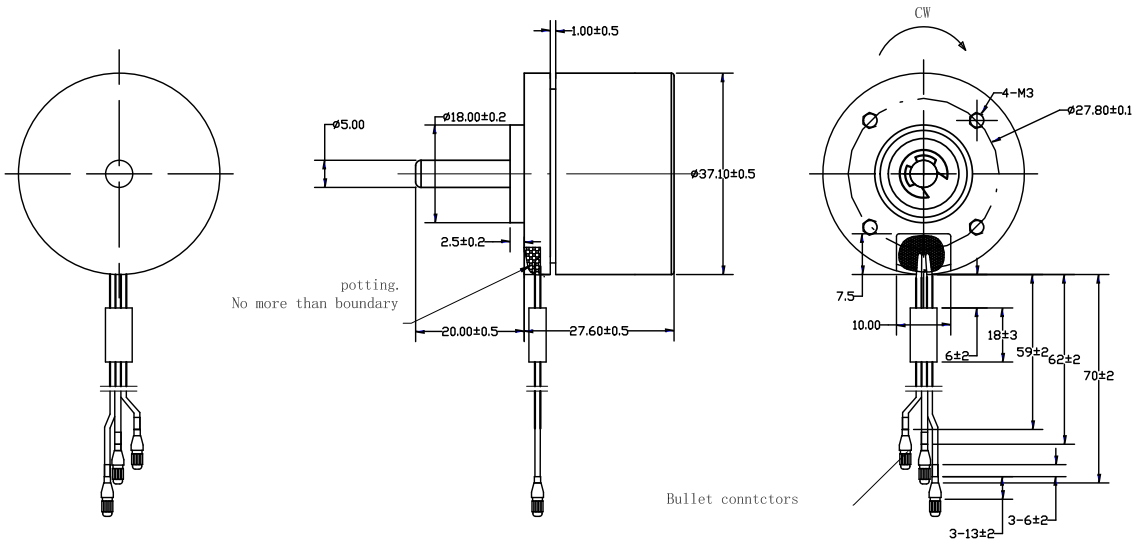

Brushless DC Motor · **BO4316NB2B**

Outer Rotor Without Sensor

	Characteristics		05-38-24.0
1	Voltage	V	24
2	Terminal resistance	Ω	3.8
3	Terminal inductance	mH	2.8
4	No-load speed	rpm	3800
5	No-load current	A	0.08
6	Nominal torque	mNm	79.7
7	Nominal speed	rpm	2640
8	Nominal current	A	1.43
9	Max. output power	W	37
10	Max. efficiency	%	78.7
11	Back-EMF constant	mV/rpm	6.24
12	Torque constant	mNm/A	59.5
13	Speed/torque gradient	rpm/mNm	10.2
14	Rotor inertia	gcm^2	58
15	Weight	g	71.5
16	Thermal resistance housing-ambient	K/W	2.8
17	Thermal resistance winding-housing	K/W	5.8
18	Thermal time constant motor	s	400
19	Thermal time constant winding	s	13
20	Operating temperature range	°C	-40 ~ +120
21	Thermal class of winding	°C	155
22	Axial play	mm	0.012
23	Radial play	mm	0.008
24	Axial load dynamic	N	8
25	Axial load static	N	85
26	Radial load at 3 mm from mounting face	N	26
27	No. of pole pairs		8
28	Bearings		2 ball bearings
29	Commutation		Sensorless
30	Protection class		IP 30

Applications

UAV gimbals and handheld gimbals

Options	
Lead wires length	Bearing type
Shaft length	Hall sensor
Special coils	Encoder
Gearheads	Driver

Approx. actual size

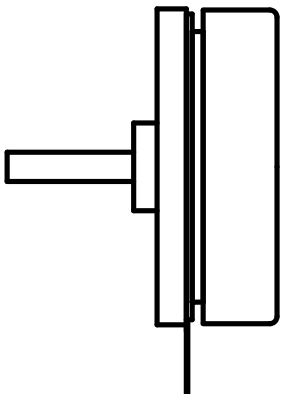

Dimension (mm) · BO4316NB2B

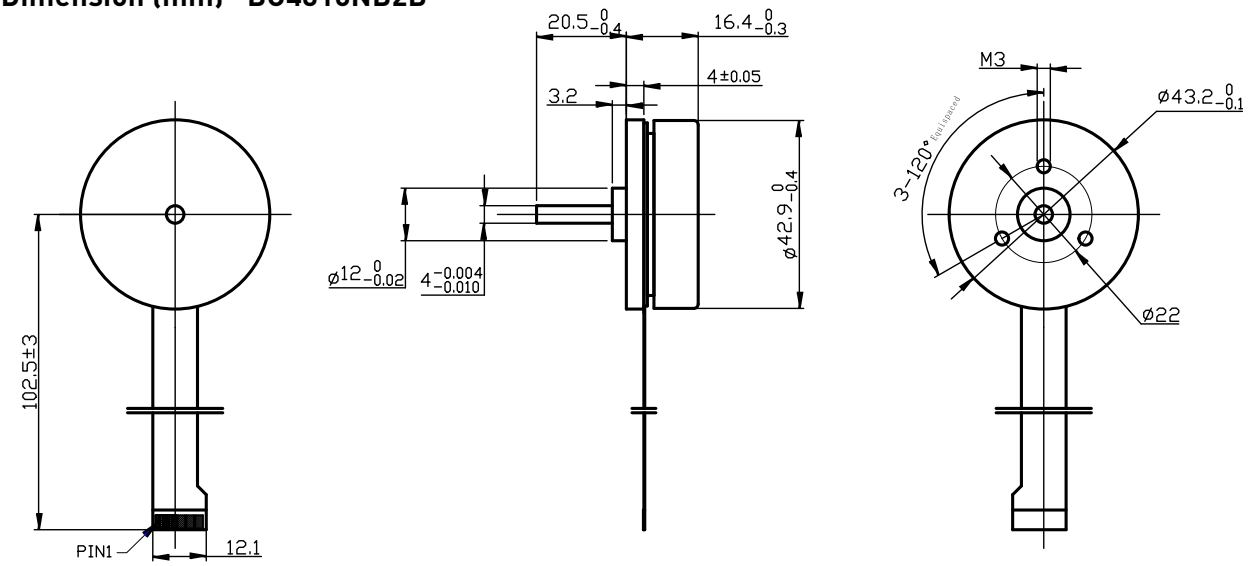

Brushless DC Motor · **BO4326NBH2B**

Outer Rotor With Sensor

	Characteristics		01-56-24.0
1	Voltage	V	24
2	Terminal resistance	Ω	0.85
3	No-load speed	rpm	5600
4	No-load current	A	0.26
5	Stall torque	mNm	1100
6	Stall current	A	28.24
7	Nominal torque	mNm	155
8	Nominal speed	rpm	4500
9	Nominal current	A	4.1
10	Max. output power	W	150
11	Max. efficiency	%	81.6
12	Back-EMF constant	mV/rpm	4.2
13	Torque constant	mNm/A	40.5
14	KV value	rpm/V	230
15	Speed/torque gradient	rpm/mNm	4.9
16	Rotor inertia	gcm^2	173
17	Weight	g	135
18	Thermal resistance housing-ambient	K/W	2.1
19	Thermal resistance winding-housing	K/W	1.8
20	Thermal time constant motor	s	360
21	Thermal time constant winding	s	69
22	Operating temperature range	°C	-40 ~ +120
23	Thermal class of winding	°C	155
24	Axial play	mm	0.012
25	Radial play	mm	0.008
26	Axial load dynamic	N	8
27	Axial load static	N	110
28	Radial load at 3 mm from mounting face	N	31
29	No. of pole pairs		8
30	Bearings		2 ball bearings
31	Commutation		Hall sensor
32	Protection class		IP 20

Applications

Robotics, industrial automation, etc.

Options	
Lead wires length	Bearing type
Shaft length	Hall sensor
Special coils	Encoder
Gearheads	Driver

Approx. actual size

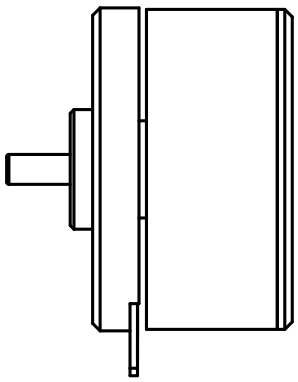

Dimension (mm) · BO4326NBH2B

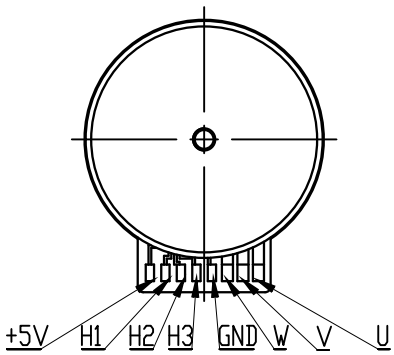

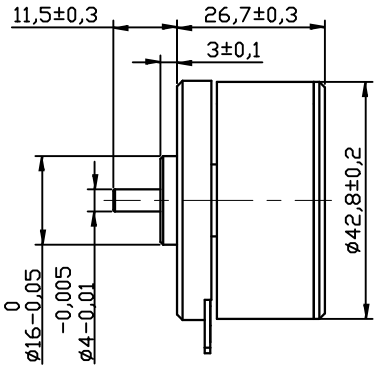

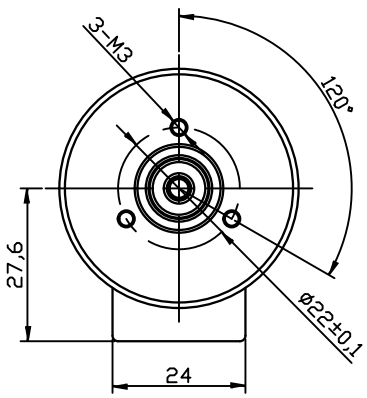

Brushless DC Motor · **BO4830N2B**

Outer Rotor Without Sensor

	Characteristics		02-106-22.2
1	Voltage	V	22.2
2	Terminal resistance	Ω	0.075
3	No-load speed	rpm	10600
4	No-load current	A	1
5	Nominal torque	mNm	138
6	Nominal speed	rpm	9800
7	Nominal current	A	8
8	Max. output power	W	560
9	Max. efficiency	%	88.7
10	Back-EMF constant	mV/rpm	2.1
11	Torque constant	mNm/A	20
12	KV value	rpm/V	480
13	Speed/torque gradient	rpm/mNm	1.8
14	Rotor inertia	gcm^2	124
15	Weight	g	160
16	Thermal resistance housing-ambient	K/W	1.6
17	Thermal resistance winding-housing	K/W	1.5
18	Thermal time constant motor	s	350
19	Thermal time constant winding	s	50
20	Operating temperature range	°C	-40 ~ +120
21	Thermal class of winding	°C	180
22	Axial play	mm	0.012
23	Radial play	mm	0.008
24	Axial load dynamic	N	10
25	Axial load static	N	110
26	Radial load at 3 mm from mounting face	N	42
27	No. of pole pairs		7
28	Bearings		2 ball bearings
29	Commutation		Sensorless
30	Protection class		IP 20

Applications

UAV, industrial automation, etc.

Options	
Lead wires length	Bearing type
Shaft length	Encoder
Special coils	Driver
Gearheads	

Dimension (mm) · BO4830N2B

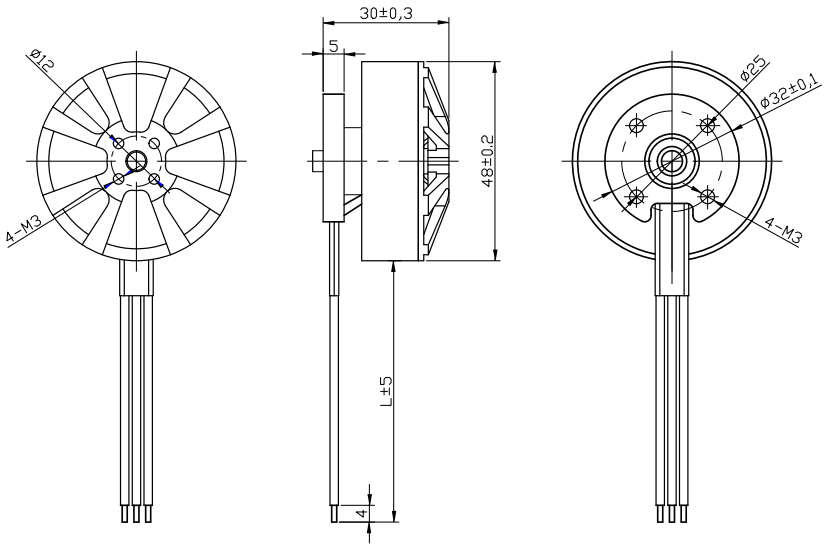

Approx. actual size

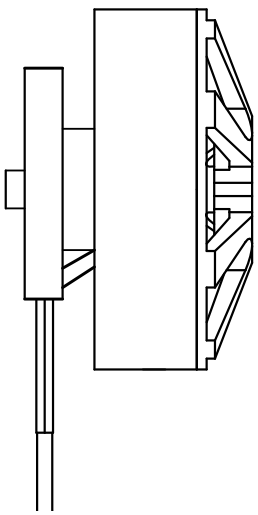

Brushless DC Motor · **BO6133N2B**

Outer Rotor Without Sensor

	Characteristics		01-64-22.2
1	Voltage	V	22.2
2	Terminal resistance	Ω	0.07
3	No-load speed	rpm	6400
4	No-load current	A	0.93
5	Nominal torque	mNm	565
6	Nominal speed	rpm	5900
7	Nominal current	A	18
8	Max. output power	W	1750
9	Max. efficiency	%	89.4
10	Back-EMF constant	mV/rpm	3.5
11	Torque constant	mNm/A	33
12	KV value	rpm/V	290
13	Speed/torque gradient	rpm/mNm	0.6
14	Rotor inertia	gcm^2	620
15	Weight	g	230
16	Thermal resistance housing-ambient	K/W	0.9
17	Thermal resistance winding-housing	K/W	1
18	Thermal time constant motor	s	15
19	Thermal time constant winding	s	45
20	Operating temperature range	°C	-40 ~ +120
21	Thermal class of winding	°C	180
22	Axial play	mm	0.012
23	Radial play	mm	0.008
24	Axial load dynamic	N	12
25	Axial load static	N	235
26	Radial load at 3 mm from mounting face	N	146
27	No. of pole pairs		7
28	Bearings		2 ball bearings
29	Commutation		Sensorless
30	Protection class		IP 20

Applications

UAV, industrial automation, etc.

Options	
Lead wires length	Bearing type
Shaft length	Driver
Special coils	

Dimension (mm) · BO6133N2B

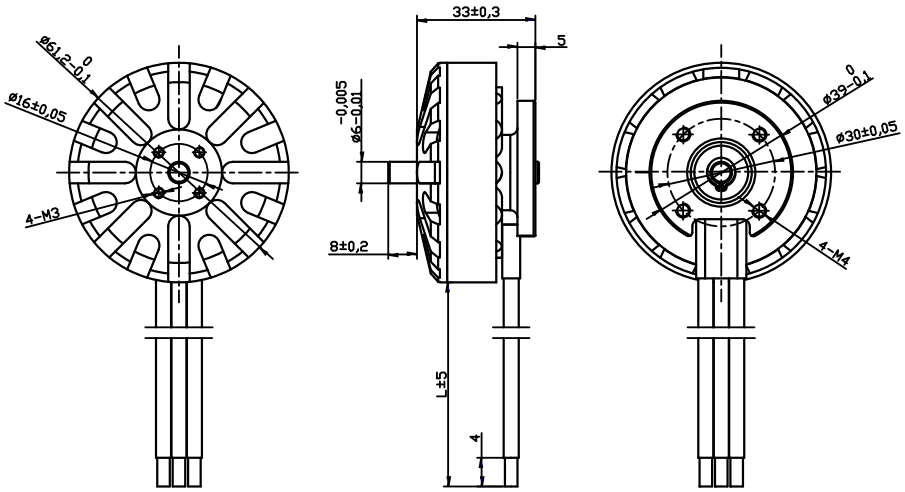

Approx. actual size

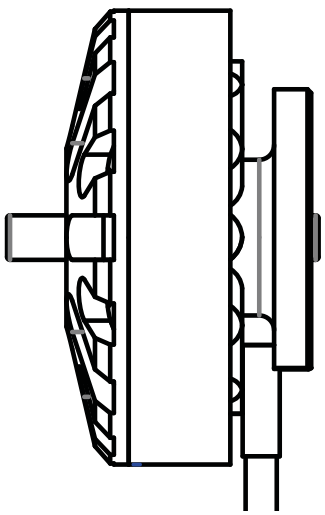

Brushless DC Motor · **BO6452N3B**

Outer Rotor, Sensorless

	Characteristics		01-80-40.0	02-106-24.0	03-104-36.0
1	Voltage	V	40	24	36
2	Terminal resistance	Ω	0.08	0.018	0.043
3	No-load speed	rpm	8000	10600	10400
4	No-load current	A	1.3	3.5	3.0
5	Stall torque	mNm	–	–	–
6	Stall current	A	–	–	–
7	Nominal torque	mNm	1180	1400	1500
8	Nominal speed	rpm	7500	9800	9600
9	Nominal current	A	26	70	49
10	Max. output power	W	1040	1680	1764
11	Max. efficiency	%	90.0	90.0	88.3
12	Back-EMF constant	mV/rpm	5.0	2.3	3.4
13	Torque constant	mNm/A	47.6	21.56	32.94
14	KV value	rpm/V	200	441.7	288.9
15	Speed/torque gradient	rpm/mNm	0.34	0.37	0.38
16	Rotor inertia	gcm^2	1330	1330	1330
17	Weight	g	625	623	235
18	Thermal resistance housing-ambient	K/W	1.9	1.9	1.9
19	Thermal resistance winding-housing	K/W	1.5	1.5	1.5
20	Thermal time constant motor	s	180	180	180
21	Thermal time constant winding	s	60	60	60
22	Operating temperature range	°C	-40 ~ +120	-40 ~ +120	-40 ~ +120
23	Thermal class of winding	°C	180		
24	Axial play	mm	0.012		
25	Radial play	mm	0.008		
26	Axial load dynamic	N	12		
27	Axial load static	N	235		
28	Radial load at 3 mm from mounting face	N	146		
29	No. of pole pairs		4		
30	Bearings		2 ball bearings		
31	Commutation		Sensorless		
32	Protection class		IP 30		

Applications

UAV gimbals and handheld gimbals.

Options

Lead wires length	Bearing type
Shaft length	Driver
Special coils	

Approx. actual size

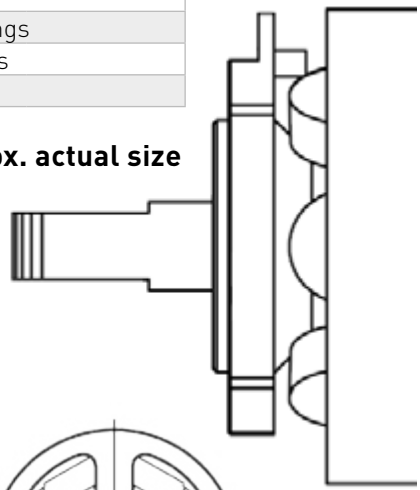

Dimension (mm) · BO6452N3B

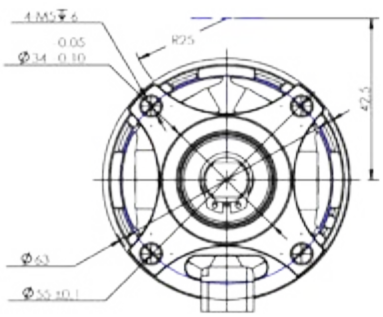

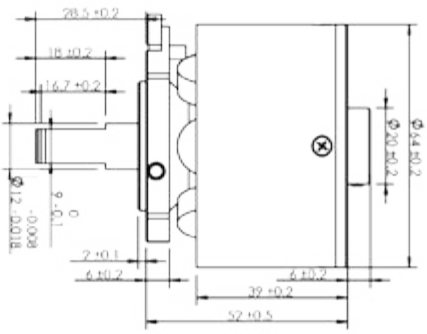

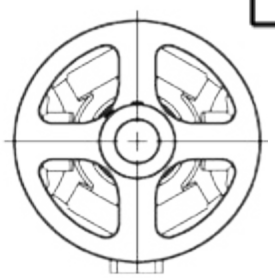

M 1:2

Brushless DC Motor · **BO8724N2B**

Outer Rotor Without Sensor

	Characteristics		01-36-48.0	02-36-36.0	03-36-24.0
1	Voltage	V	48	36	24
2	Terminal resistance	Ω	0.33	0.17	0.085
3	No-load speed	rpm	3600	3600	3200
4	No-load current	A	0.5	0.7	1.0
5	Stall torque	mNm	18393	20089	17848
6	Stall current	A	145.5	211.8	282.3
7	Nominal torque	mNm	1210	1210	1210
8	Nominal speed	rpm	3200	3200	3200
9	Nominal current	A	9.7	13	19.5
10	Max. output power	W	1732	1892	1681
11	Max. efficiency	%	88.6	88.8	88.4
12	Back-EMF constant	mV/rpm	13.3	10.0	6.6
13	Torque constant	mNm/A	126.9	95.2	64.3
14	KV value	rpm/V	75	100	133.3
15	Speed/torque gradient	rpm/mNm	0.2	0.2	0.2
16	Rotor inertia	gcm^2	510	510	510
17	Weight	g	270	270	270
18	Thermal resistance housing-ambient	K/W	1.1	1.1	1.1
19	Thermal resistance winding-housing	K/W	0.48	0.48	0.48
20	Thermal time constant motor	s	340	340	340
21	Thermal time constant winding	s	50	50	50
22	Operating temperature range	°C	-40 ~ +120	-40 ~ +120	-40 ~ +120
23	Thermal class of winding	°C	180		
24	Axial play	mm	0.012		
25	Radial play	mm	0.008		
26	Axial load dynamic	N	10		
27	Axial load static	N	140		
28	Radial load at 3 mm from mounting face	N	145		
29	No. of pole pairs		21		
30	Bearings		2 ball bearings		
31	Commutation		Sensorless		
32	Protection class		IP 20		

Applications

UAV, E-bike, industrial automation, etc.

Options

Lead wires length	Bearing type
Shaft length	Driver
Special coils	

Approx. actual size

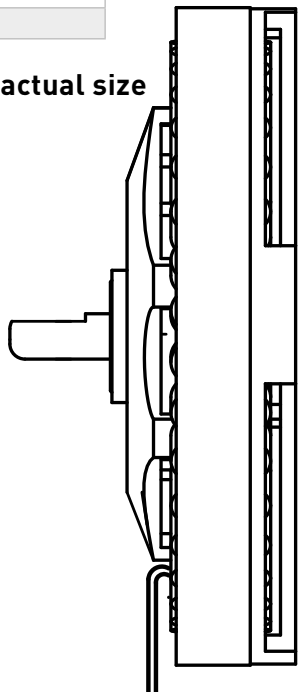

Dimension (mm) · BO8724N2B

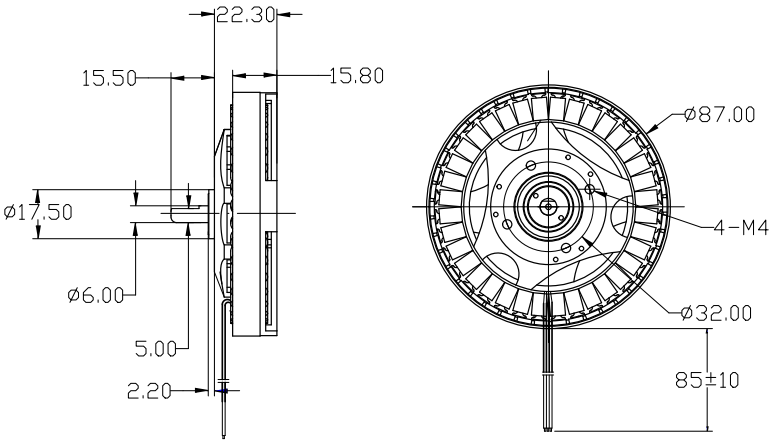

KOCO DC-MOTION, Inc.
20676 Carrey Rd.
Walnut, CA 91789, U.S.A.

Phone (+1) 909-468-9877
sales@kocodcmotion.com
www.kocodcmotion.com

